PMC-512-M
Multi-Circuit Power Monitor
User Manual
Version: V1.1
September 20, 2026

This manual may not be reproduced in whole or in part by any means without the express written permission from CET.

The information contained in this manual is believed to be accurate at the time of publication; however, CET assumes no responsibility for any errors which may appear here and reserves the right to make changes without notice. Please consult CET or your local representative for the latest product specifications.

DANGER

This symbol indicates the presence of danger that may result in severe injury or death and permanent equipment damage if proper precautions are not taken during the installation, operation or maintenance of the device.

CAUTION

This symbol indicates the potential of personal injury or equipment damage if proper precautions are not taken during the installation, operation or maintenance of the device.

DANGER

Failure to observe the following instructions may result in severe injury or death and/or equipment damage.

- Installation, operation and maintenance of the meter should only be performed by qualified, competent personnel that have the appropriate training and experience with high voltage and current devices. The meter must be installed in accordance with all local and national electrical codes.
- Ensure that all incoming AC power and other power sources are turned OFF before performing any work on the meter.
- Before connecting the meter to the power source, check the label on top of the meter to ensure that it is equipped with the appropriate power supply, and the correct voltage and current input specifications for your application.
- During normal operation of the meter, hazardous voltages are present on its terminal strips and throughout the connected potential transformers (PT) and current transformers (CT). PT and CT secondary circuits are capable of generating lethal voltages and currents with their primary circuits energized. Follow standard safety precautions while performing any installation or service work (i.e. removing PT fuses, shorting CT secondaries…etc).
- Do not use the meter for primary protection functions where failure of the device can cause fire, injury or death. The meter should only be used for shadow protection if needed.
- Under no circumstances should the meter be connected to a power source if it is damaged.
- To prevent potential fire or shock hazard, do not expose the meter to rain or moisture.
- Setup procedures must be performed only by qualified personnel familiar with the instrument and its associated electrical equipment.
- DO NOT open the instrument under any circumstances.

Limited warranty

- CET offers the customer a minimum of 12-month functional warranty on the meter for faulty parts or workmanship from the date of dispatch from the distributor. This warranty is on a return to factory for repair basis.
- CET does not accept liability for any damage caused by meter malfunctions. CET accepts no responsibility for the suitability of the meter to the application for which it was purchased.
- Failure to install, set up or operate the meter according to the instructions herein will void the warranty.
- Only CET's duly authorized representative may open your meter. The unit should only be opened in a fully anti-static environment. Failure to do so may damage the electronic components and will void the warranty.

Table of Contents

Glossary 7
Chapter 1 Introduction 8
1.1 Overview 8
1.2 Features 8
1.3 Getting more information 9
Chapter 2 Installation 10
2.1 Appearance 10
2.2 Dimensions and Mounting 11
2.2.1 Mounting PMC-512-M 11
2.2.2 CTs Dimensions 12
2.2.3 CT Adaptors Dimensions 14
2.3 Wiring Connections 15
2.3.1 Wiring Modes 15
2.3.2 CT Wiring 15
2.3.3 Connect CTs to PMC-512-M via CT Adaptor 16
2.3.4 Communications Wiring 17
2.3.5 Digital Input Wiring 17
2.3.6 Digital Output Wiring 18
2.3.7 NTC Input Wiring 18
2.3.8 Residual Current (Ir) Wiring 18
2.3.9 Power Supply Wiring 18
Chapter 3 Front Panel 19
3.1 Front Panel LED Indicators and Labels 19
3.2 Using the Front Panel Buttons 19
3.3 Data Display 20
3.3.1 Auto-Scroll Display 20
3.3.2 Metering 21
3.3.3 View Setup 23
3.3.4 SOE Log 24
3.4 Setup and Maintenance via the Front Panel 24
3.4.1 Making Setup Changes 24
3.4.2 Setup Menu 25
3.4.3 Configuration 25
3.4.4 Maintenance 29
3.4.5 Information 30
Chapter 4 Applications 31
4.1 Inputs and Outputs 31
4.1.1 Digital Inputs 31
4.1.2 Digital Outputs 31
4.1.3 Energy Pulse Outputs 31
4.1.4 IR Input (Optional) 31
4.1.5 NTC Input (Optional) 32
4.2 Power and Energy 32
4.2.1 Basic Measurements 32
4.2.2 Energy Measurements 32
4.2.3 Demands 32
4.3 Power Quality 33
4.3.1 Phase Angles 33
4.3.2 Unbalance 33
4.3.3 Harmonics 33
4.3.4 TDD 34
4.3.5 K-Factor 34
4.3.6 Crest Factor 34
4.4 Alarm Setpoints 35
4.4.1 Current ON/OFF Status 35

4.4.2 Current Alarms 35
4.4.3 Power Alarm 36
4.4.4 Voltage Alarm 37
4.4.5 Frequency Alarm 38
4.4.6 Unbalance Alarm 39
4.4.7 Phase Reversal Alarm 39
4.4.8 Phase Loss Alarm 39
4.4.9 DI Alarm 40
4.4.10 Temperature Alarm 40
4.4.11 Residual Current Alarm 40
4.5 Data Logging 41
4.5.1 SOE Log 41
4.5.2 Daily and Monthly Freeze Log 41
4.5.3 Data Recorder Log (DR Log) 41
4.6 Time of Use (TOU) 42
4.7 Diagnostics 42
4.7.1 Voltage Phase Loss 43
4.7.2 Current Phase Loss 43
Chapter 5 Modbus Register Map 44
5.1 General Status 44
5.2 Basic Measurements 47
5.2.1 Measurements 47
5.2.2 3-Φ SMs Measurements 47
5.2.3 1-Φ SMs Measurements 48
5.3 Energy Measurements 49
5.3.1 3-Φ SMs Energy Measurements 49
5.3.2 1-Φ SMs Energy Measurements 49
5.3.3 TOU Energy Measurements 50
5.4 Demands 51
5.4.1 Present Demands 51
5.4.2 Max. Demand Log 51
5.5 Harmonic Measurements 52
5.6 PQ Measurements 53
5.7 Log Register 54
5.7.1 SOE Log 54
5.7.2 Daily Freeze Log 54
5.7.3 Monthly Freeze Log 55
5.7.4 Data Recorder Log 56
5.8 Device Setup 56
5.8.1 Basic Setup Parameters 56
5.8.2 I/O Setup Parameters 58
5.8.3 Communication Setup Parameters 58
5.8.4 3-Φ SMs Setup Parameters 58
5.8.5 Alarm Setup 59
5.8.6 Maintenance Setup 61
5.8.7 Data Recorder Setup 61
5.8.8 Ethernet Setup (Optional) 62
5.8.9 MQTT Setup (Optional) 62
5.8.10 TOU Setup 63
5.9 Remote Control (Optional) 66
5.10 Clear/Reset Control 66
5.11 Time Registers 67
5.12 Meter Information 67
Appendix A - SOE Event Classification 69
Appendix B - Data Recorder Parameters 71
Appendix C - Technical Specifications 75

C.1 Main Unit 75
C.2 External CTs 76
Appendix D - Standards Compliance 77
Appendix E - Ordering Guide 78
Revision History Logs 80
Contact us 81

Glossary

CET	= CET Electric Technology
1-Φ	= Single Phase
3-Φ	= Three Phase
SM	= Sub Meter
LCD	= Liquid Crystal Display
DMD/Dmd	= Demand
PQ	= Power Quality
Fund.	= Fundamental
THD	= Total Harmonic Distortion
TOHD	= Total Odd Harmonic Distortion
TEHD	= Total Even Harmonic Distortion
Hn	= nth order Harmonic, integer multiple (n) of the Fundamental Frequency (50Hz or 60Hz)
HDn	= nth order Harmonic Distortion
DR	= Data Recorder
SOE	= Sequence Of Events
DI	= Digital Input
DO	= Digital Output
FIFO	= First In First Out
RTC	= Real Time Clock
U1/2/3	= 3-phase Line to Neutral Voltage
U12/23/31	= 3-phase Line to Line Voltage
I1/2/3	= 3-phase Current

Chapter 1 Introduction

This manual explains how to use the PMC-512-M Multi-Circuit Power Monitor.

This chapter provides an overview of the PMC-512-M and summarizes many of its key features.

1.1 Overview

The PMC-512-M is CET's latest offer for the economical multi-circuit monitoring in Data Centers, Telecom Base Stations, and Industrial & Commercial Buildings. Housed in a compact DIN Rail Mount enclosure, the PMC-512-M is perfectly suited for high-density metering applications. It features quality construction with multifunction and Class 1 Energy Measurements. The PMC-512-M comes standard with a built-in Dot-Matrix LCD display, and up to 4xDO for control or alarming. It optionally provides up to 4xIr Input for Residual Current Measurement, 4xNTC Input for temperature measurements, as well as other I/O options for different applications. The standard SOE Log records all setup changes, alarms and DO operations in ±1ms resolution. With two RS-485 ports supporting Modbus RTU and an optional 10Base-T/100Base-TX Ethernet Port, the PMC-512-M can easily be deployed in an intelligent, multi-circuit monitoring solution.

Following is a list of typical applications for the PMC-512-M:

- Data Center and Telecom Base Station PDUs
- Industrial Distribution Board
- Commercial & Residential LV High-Density Multi-Circuit monitoring

The above are just a few of the many applications. Contact CET Technical Support should you require further assistance with your application.

1.2 Features

Ease of use

- Status LEDs for Run, Comm. Activities and Phase Voltage
- Self-Diagnostic function
- Password-protected setup via the Front Panel
- Compact, DIN Rail Mount for easy installation

Basic Measurements

- IEC 62053-21 Class 1 for kWh and IEC 62053-24 Class 1 for kvarh metering
- ULN & ULL per Phase and Average, Phase Angle
- Optional Ir
- Voltage Unbalance
- Frequency
- Temperature

Sub Meters (SM)

- Support 12x1-Φ/4x3-Φ Sub-Meters or optional 24x1-Φ/8x3-Φ Sub-Meters without configuration
- 12x1-Φ/24x1-Φ SM: I, P, Q, S, PF and I Phase Angle, kWh/kvarh Imp./Exp./Net/Tot.
- 4x3-Φ or 8x3-Φ SM
  - I per Phase and Average, and In (Calculated)
  - P, Q, S, PF per Phase and Total
  - I Unbalance
  - Per-Phase I Angle
  - Per-Phase and 3-Phase Total kWh/kvarh Imp./Exp./Net/Tot.
  - Per-Phase and 3-Phase Total kWh/kvarh Imp./Exp. for Tariff T1-T6
  - Demand for I per Phase and P/Q/S per Phase and Total
  - Max. Demands for I, P/Q per Phase and Total with timestamp for This Month and Last Month (or Since Last Reset and Before Last Reset)

Power Quality

- 12x1-Φ or 24x1-Φ SM:
  - U THD, TOHD, TEHD and Individual Harmonics up to 31st
  - Total Harmonics (per Phase I THD, TOHD, TEHD)
  - Per-Phase and Total P Fund., Harmonic P, and PF Fund.
  - TDD, K-Factor and Crest Factor for Current

TOU

- Two independent sets of TOU Schedules, each supporting
  - Up to 12 Seasons ·
  - 20 Holidays or Alternate Days and 3 Weekdays
  - 12 Daily Profiles, each with 14 Periods
  - 6 Tariffs, each providing information for kWh/kvarh Import/Export per Phase and Total
- Switching between two TOU schedules manually or according to preprogrammed time

SOE Log

- 128 events time-stamped to ±1ms resolution
- DI status changes, DO operations, Alarms, Setup changes, Self-Diagnosis

Data Recording

- 5 Data Recorders of 60 parameters each for Real-time measurements, Harmonics, Energy, Demand, Alarm, etc.
- Recording interval from 1 minute to 40 days
- Configurable capacity up to a max. of 52 days at 15-minute interval

Freeze Logs

- 62 Daily Freeze Logs for kWh/kvarh Import/Export
- 31 Monthly Freeze Logs for kWh/kvarh Import/Export

Alarms

- Support Current, Voltage, Frequency, Power, Unbalance, Phase Reversal, Phase Loss, Ir, Digital Input and Temperature Alarms
- Configurable Threshold and Time Delay
- All alarms are recorded in the SOE Log

Input & Output

- Up to 4xForm A Mechanical Relay for alarming and general purpose control
- Optional 12xDigital Input
  - Active Contact, 220VAC/DC external excitation
  - 1000Hz sampling with programmable debounce
  - Pulse counting with programmable weight for each channel for collecting WAGES (Water, Air, Gas, Electricity, Steam) information
- Optional 4xIr Input for Residual Current measurement (CT not included)
- Optional 4xTemperature Input (NTC sensors not included)

RS-485

- Dual Optically Isolated RS-485 ports
- Baud Rate from 1,200 to 38,400 bps
- Modbus RTU protocol

Ethernet (Optional)

- 1x10Base-T/100Base-TX Ethernet Port with RJ45 connector
- Modbus TCP, MQTT and SNTP

Real-Time Clock

- Battery-backed Real-time Clock with 6ppm accuracy (<0.5s per day)

System Integration

- Supported by CET's PecStar® iEMS and iEEM
- Easy integration into other Automation, Energy Management, BMS or SCADA systems via Modbus RTU/TCP

1.3 Getting more information

Additional information is available from CET via the following sources:

- Visit www.cet-global.com
- Contact your local representative
- Contact CET directly via email or telephone

Chapter 2 Installation

2.1 Appearance

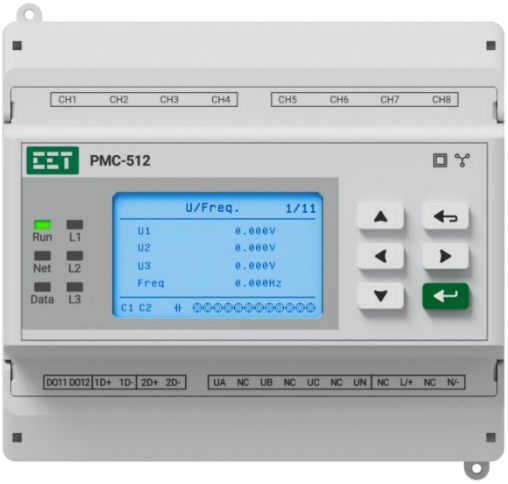

Figure 2-1 Appearance

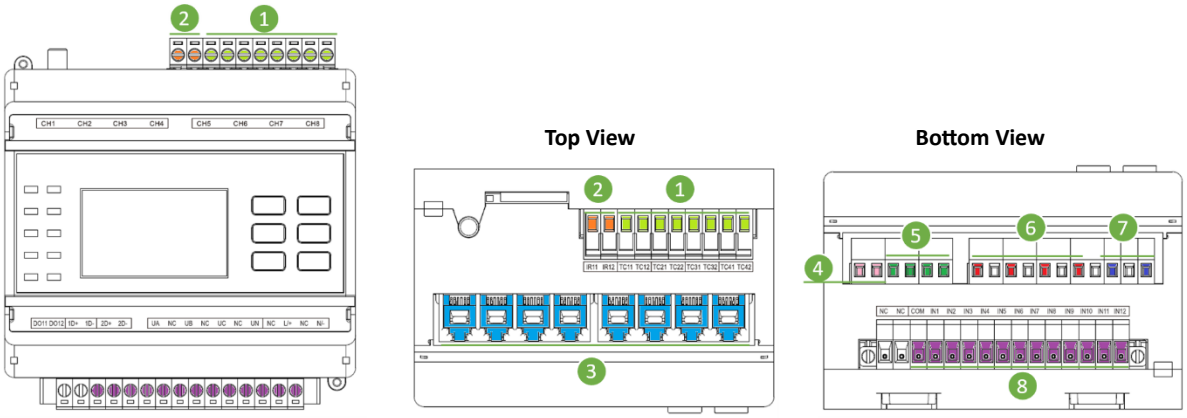

12xDI + 1xIR + 4xNTC +1xDO Option

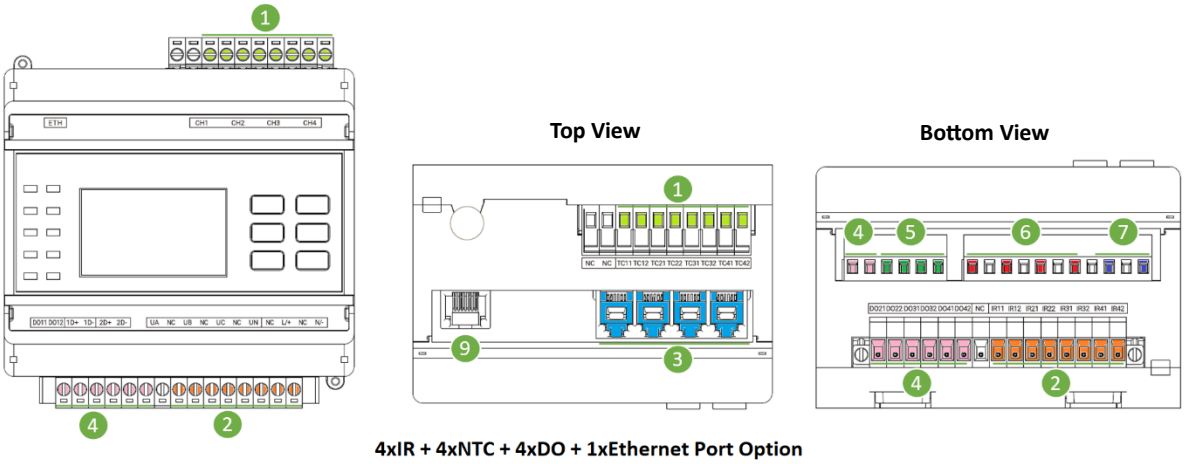

4xIR + 4xNTC + 4xDO + 1xEthernet Port Option

1	NTC Inputs	4	Digital Output(s)	7	Power Supply
2	Residual Current Input(s)	5	RS-485 Port	8	Digital Inputs
3	4 or 8 x 3-Φ Current Input	6	Voltage Inputs	9	Ethernet Port

Figure 2-2 Terminal Diagram

2.2 Dimensions and Mounting

Caution

Installation of the PMC-512-M should only be performed by qualified, competent personnel that have the appropriate training and experience with high voltage and current devices. The meter must be installed in accordance with all local and national electrical codes.

During the operation of the meter, hazardous voltages are present at the input terminals. Failure to observe precautions can result in serious or even fatal injury and equipment damage.

The PMC-512-M should be installed in a dry environment without dust and kept away from heat, radiation and electrical noise sources. The PMC-512-M is usually installed inside the PDU cabinet. Please reserve enough room for other accessories and make it convenient for future maintenance.

2.2.1 Mounting PMC-512-M

Installation steps:

- Before installation, make sure that the DIN Rail is already in place.
- Move the installation clips at the back of the PMC-512-M downward to the “unlock” position.
- Align the top of the mounting channel at the back of the PMC-512-M at an angle against the top of the DIN Rail as shown in figure below.
- Rotate the bottom of the PMC-512-M towards the back while applying a slight pressure to make sure that the device is completely and securely fixed on to the DIN Rail.
- Push the installation clips upward to the “lock” position to secure the PMC-512-M on to the DIN Rail.

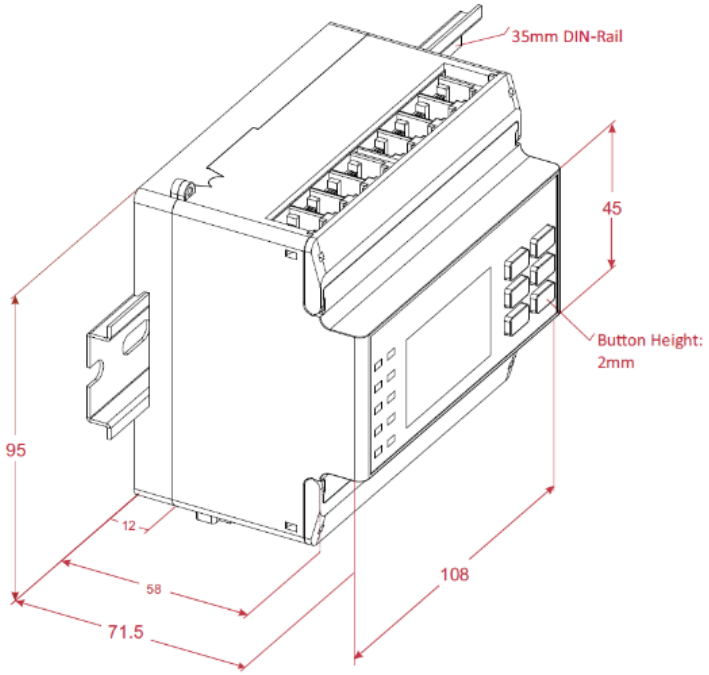

Figure 2-3 Mounting the PMC-512-M

2.2.2 CTs Dimensions

2.2.2.1 PMC-SCCT-50A-40mA-16-A

Unit: mm

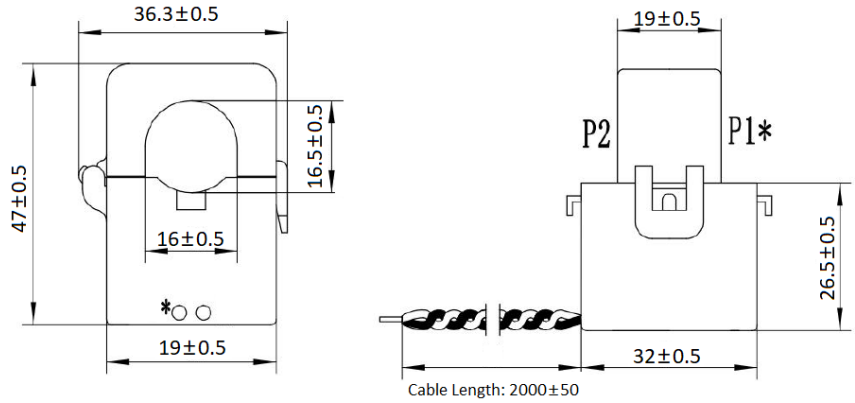

Figure 2-4 PMC-SCCT-50A-40mA-16-A Dimensions

2.2.2.2 PMC-SCCT-100A-40mA-16-A

Unit: mm

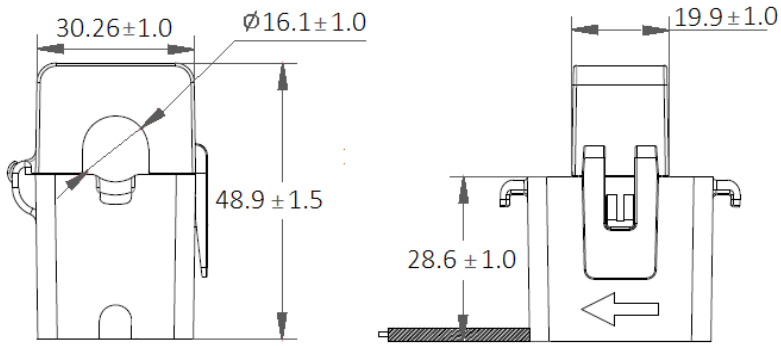

Figure 2-5 100A-40mA-16-A Dimensions

2.2.2.3 PMC-SCCT-200A-40mA-24-A

Unit: mm

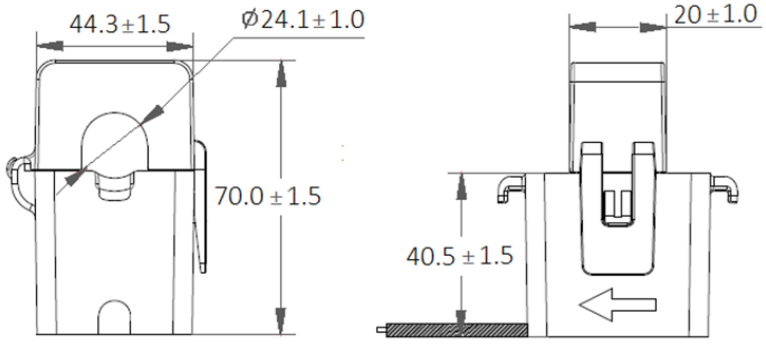

Figure 2-6 PMC-SCCT-200A-40mA-24-A Dimensions

2.2.2.4 PMC-SCCT-400A-40mA-35-A

Unit: mm

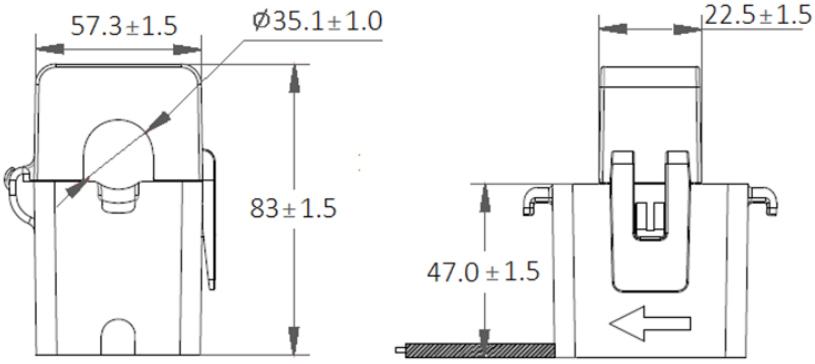

Figure 2-7 PMC-SCCT-400A-40mA-35-A Dimensions

2.2.2.5 PMC-SCCT-800A-40mA-A

Unit: mm

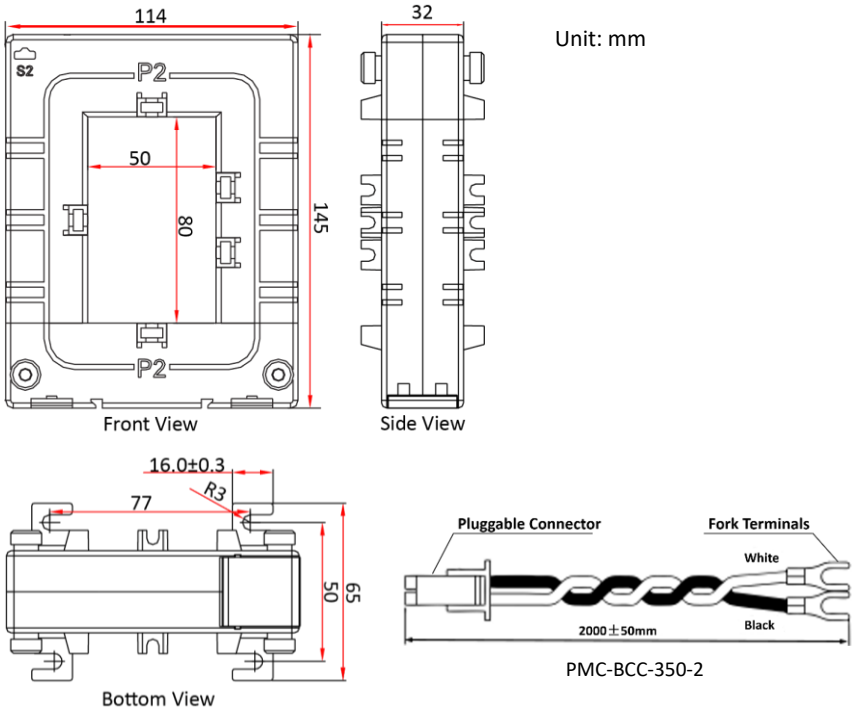

Figure 2-8 PMC-SCCT-800A-40mA-A Dimensions

2.2.2.6 PMC-SCCT-1600A-40mA-A

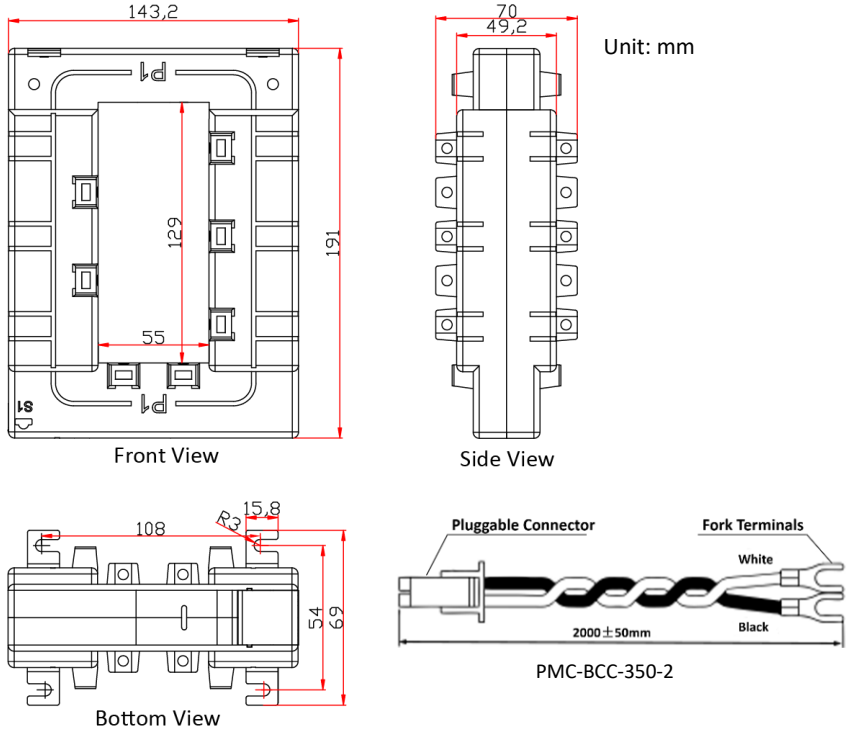

Figure 2-9 PMC-SCCT-1600A-40mA-A Dimensions

2.2.2.7 PMC-CT-100A-40mA-12-A

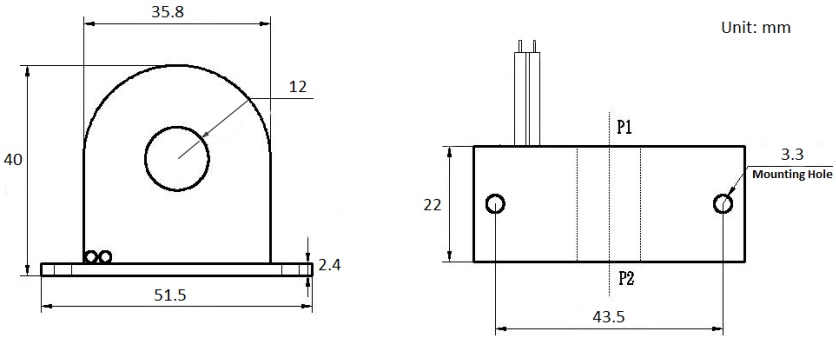

Figure 2-10 PMC-CT-100A-40mA-12-A Dimensions

2.2.3 CT Adaptors Dimensions

2.2.3.1 PMC-BCC-RJ12-3CT, P

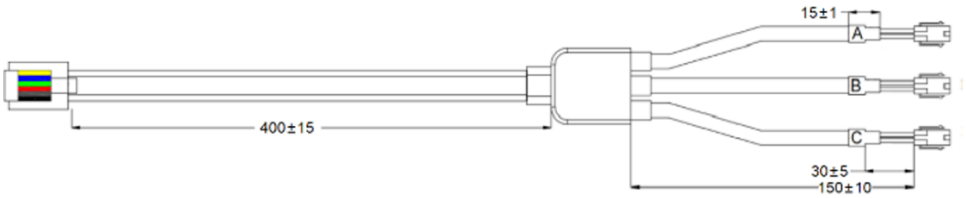

Figure 2-11 PMC-BCC-RJ12-3CT, P (RJ12 – Pluggable Connector Adaptor, standard)

2.2.3.2 PMC-BCC-RJ12-3CT, N

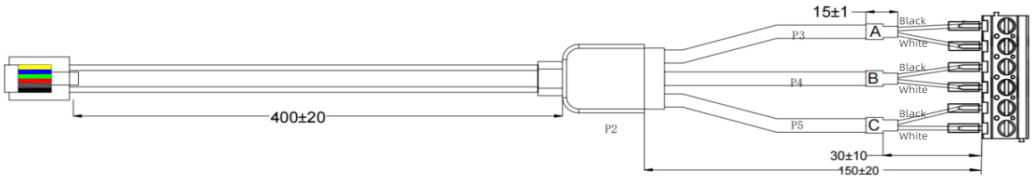

Figure 2-12 PMC-BCC-RJ12-3CT, P (RJ12 – Needle Connector Adaptor, optional)

2.3 Wiring Connections

2.3.1 Wiring Modes

DANGER

Please make sure that the Voltage and Current circuits are not energized while connecting Voltage inputs to the PMC-512-M.

The PMC-512-M supports the following wiring modes:

- Single Phase (1P2W) Wiring
- 3-Wire Delta (3P3W) Wiring
- 4-Wire Wye (3P4W) Wiring

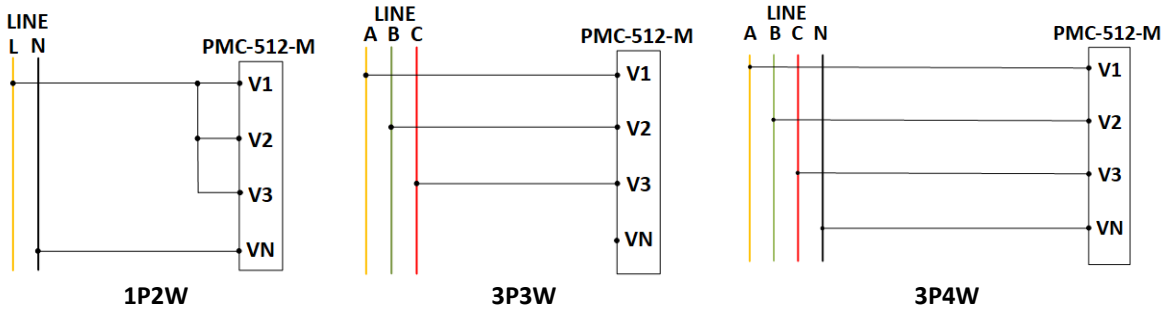

Figure 2-13 Wiring Modes

2.3.2 CT Wiring

Caution

Please make sure that the circuit is de-energized before installing the SCCT for maximum safety. Do not open circuit the SCCT's secondary output under any circumstances while the circuit is energized. Failure to observe proper precaution while working with this product may result in severe injury or death.

2.3.2.1 Wiring for 50A/40mA, 100A/40mA, 200A/40mA or 400A/40mA SCCT

Steps:

a. Open the SCCT by slightly pulling on the clip. Please ensure that SCCT's contact surface is clean and without contaminants for best accuracy performance.
b. Put the cable through the opening of the SCCT and make sure that Current flow direction is aligned with the arrow marking on the SCCT. Close the SCCT and make sure that the clip is securely latched.
c. Secure the cable to the SCCT with a wire strap.

a b c

Figure 2-14 50A/40mA, 100A/40mA, 200A/40mA or 400A/40mA SCCT Wiring

2.3.2.2 Wiring for 800A/40mA or 1600A/40mA SCCT

Steps:

1. Connect the White and Black leads of the PMC-BCC-350-2 to the SCCT's S1 and S2 terminals, respectively, and the 2-pin connector (male) to the meter's Current Input terminal (female).
2. Open the SCCT by removing the thumb-screws that hold the SCCT together and make sure that SCCT's contact surface is clean and without contaminants for best accuracy performance.
3. Install the SCCT around the busbar and then carefully secure it using the provided mounting fixtures such as mounting bolts and insulation caps as shown below.
4. Reassemble the SCCT and tighten the thumb screws.

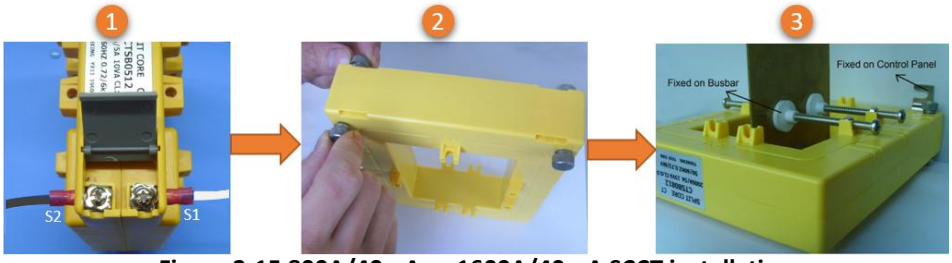

Figure 2-15 800A/40mA or 1600A/40mA SCCT installation

Notes:

1. Please separate the adjacent CTs by about 2 cm to reduce potential magnetic interference.
2. Please ensure the Load Current does not exceed the CT's Primary Current specification.

2.3.2.3 Wiring for PMC-CT-100A-40mA-12-A (Solid-Core CT)

1. Connect the RJ12 connector to the appropriate Current Inputs of the PMC-512-M.
2. Put the primary conductor through the hole of the Solid-Core CT.

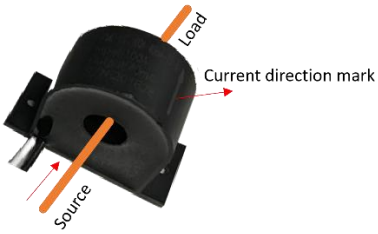

Figure 2-16 Solid-Core CT Wiring

2.3.3 Connect CTs to PMC-512-M via CT Adaptor

P1 Side	Pin
White Black Red Green Blue Yellow 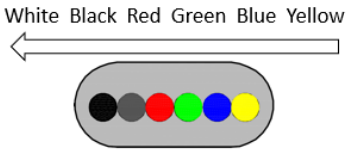	1 (Yellow) - Ia+
	2 (Blue) - Ib+
	3 (Green) - Ic+
	4 (Red) - I-
	5 (Black) - CK+
	6 (White) - CK-

Table 2-2 RJ12 Connector Pin Description

The following figure illustrates the 3 single-phase CTs are connected to the PMC-512-M via PMC-BCC-RJ12-3CT, P (pluggable connectors) or PMC-BCC-RJ12-3CT, N (needle connectors):

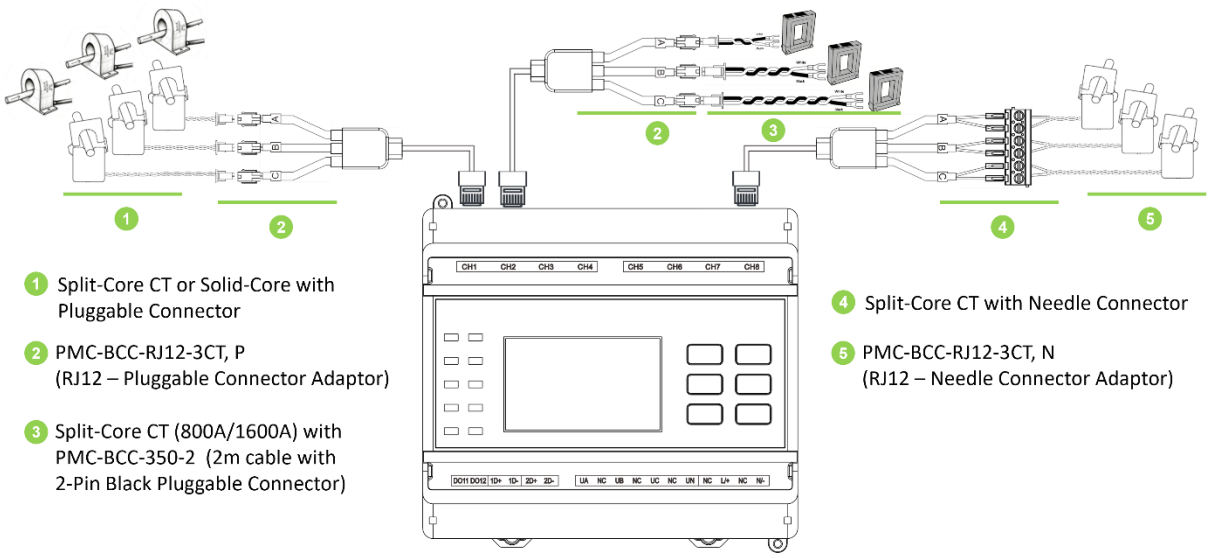

Figure 2-17 CT Adaptor Wiring

2.3.4 Communications Wiring

The PMC-512-M provides two standard RS-485 ports and supports the Modbus RTU protocol. Up to 32 devices can be connected on each RS-485 bus. The overall length of the RS-485 cable connecting all devices should not exceed 1200m.

If the master station does not have an RS-485 communications port, an RS232/RS-485 or USB/RS-485 converter with optically isolated output and surge protection should be used.

If the RS-485 bus is very long and approaches the 1200m limit as defined by the standard, it's recommended that a 120Ω termination resistor be added to the end of the RS-485 cable (but only on one end) to improve the communication reliability

The following figure illustrates the RS-485 communications connections on the PMC-512-M:

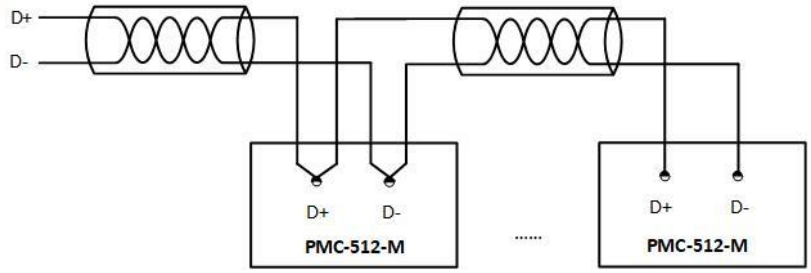

Figure 2-18 Communications Wiring

2.3.5 Digital Input Wiring

The following figure illustrates the Digital Input connections on the PMC-512-M:

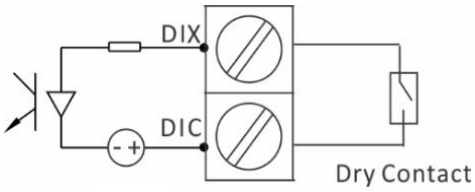

Figure 2-19 DI Wiring

2.3.6 Digital Output Wiring

The following figure illustrates the Digital Output connections on the PMC-512-M:

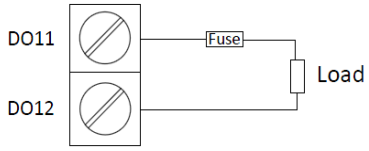

Figure 2-20 DO Wiring

2.3.7 NTC Input Wiring

The following figure illustrates the NTC Input connections on the PMC-512-M:

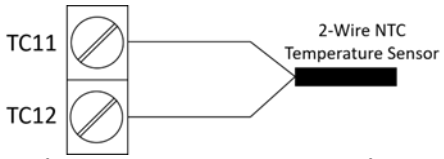

Figure 2-21 NTC Input Connections

2.3.8 Residual Current (Ir) Wiring

The following figure illustrates the Residual Current connections on the PMC-512-M:

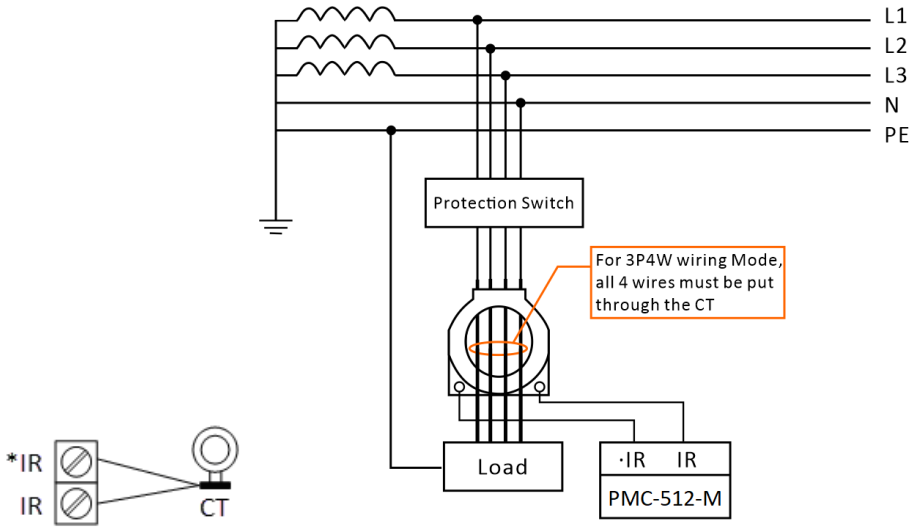

Figure 2-22 Residual Current Connections

2.3.9 Power Supply Wiring

For AC supply, connect the live wire to the L/+ terminal and the neutral wire to the N/- terminal.

For DC supply, connect the positive wire to the L/+ terminal and the negative wire to the N/- terminal.

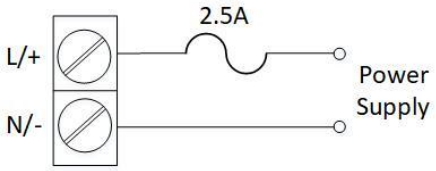

Figure 2-23 Power Supply Connections

Chapter 3 Front Panel

The PMC-512-M has an easy to read LCD display and six buttons for both data display and setup configuration purposes.

Figure 3-1 Front Panel

3.1 Front Panel LED Indicators and Labels

There are six LED indicators on the PMC-512-M's front panel as described in the following table.

LED Indicator	Color	Status	Description
Run	Green	Blinking once per second	Device is running normally
		Off	Device is running abnormally
Net~	Green	On	Ethernet port is connected
		Off	Ethernet port is disconnected
Data	Yellow	Blinking	Ethernet port is receiving or transmitting data
		Off	No Communication
L1	Green	On	Ua > 95V (3P4W) or Uab > 164V (3P3W) is detected
		Off	Ua < 95V (3P4W) or Uab < 164V (3P3W) is detected
L2	Green	On	Ub > 95V (3P4W) or Ubc > 164V (3P3W) is detected
		Off	Ub < 95V (3P4W) or Ubc < 164V (3P3W) is detected
L3	Green	On	Uc > 95V (3P4W) or Uca > 164V (3P3W) is detected
		Off	Uc < 95V (3P4W) or Uca < 164V (3P3W) is detected

~ The Net indicator will be off if the device is not equipped with the Ethernet port.

Table 3-1 Front Panel LED Indicators

The table below illustrates the special LCD display symbols Labels:

Labels	Description
C1 C2	Blinking indicates the RS-485 ports are receiving or transmitting data.
	On indicates no communication.
🔈	Blinking once per second indicates there is an Alarm and off indicates no alarm is present.
○	Digital Input is Open.
●	Digital Input is Closed.
⊣/⊢	Digital Output is Closed.
⊣ ⊢	Digital Output is Open.
T1	Current Tariff.

Table 3-2 Front Panel Special LED Labels

3.2 Using the Front Panel Buttons

Button	Data Display/Parameters Browse	Setup Configuration Mode
▲	• Pressing this button returns to the previous menu or previous measurement page/parameter.	• While inside the **Setup** menu, pressing this button scrolls to the previous menu. • If a parameter is already selected, pressing this button increments numeric value or advances to the next enumerated value in the selection list.
▼	• Pressing this button advances to the next menu or next measurement page/parameter.	• While inside the **Setup** menu, pressing this button scrolls to the next menu. • If a parameter is already selected, pressing this button decrements a numeric value or advances to the next

		enumerated value in the selection list.
	• Pressing this button scrolls to the left menu.	• After a setup parameter has been selected, pressing this button moves the cursor one position to the left if it is a numeric value. Once the cursor has reached the left most digit, pressing this button again will move the cursor to the right most digit. • This button is ignored if the selected parameter is an enumerated value.
	• Pressing this button scrolls to the right menu.	• After a setup parameter has been selected, pressing this button moves the cursor one position to the right if it is a numeric value. Once the cursor has reached the right most digit, pressing this button again will move the cursor to the left most digit. • This button is ignored if the selected parameter is an enumerated value
	• Pressing this button enters the **Main Menu** from the any auto-scroll page. • Pressing this button scrolls to the next sub-menu.	• While inside the **Setup** menu, pressing this button enters the sub-menu. • While inside a sub-menu, pressing this button enters the next sub-menu or selects a parameter to modify.
	• Pressing this button returns to the default auto-scroll page from the **Main Menu.** • Pressing this button returns to the previous menu level from inside a sub-menu	• While inside the **Setup** menu or a sub-menu, pressing this button returns to the previous menu item or setup parameter. • After the parameter has been modified, pressing this button saves or discards changes.

Table 3-3 Buttons Description

3.3 Data Display

The PMC-512-M's LCD defaults to an **Auto-Scroll** display mode where measurements illustrated in **Table 3-4** below are automatically scrolled through at a fixed 3-second interval. Users can press the button to enter the **Main Menu** and then select one of the following sub-menus for the desired information: **Metering**, **SOE Log**, **View Setup, Setup**, **Maintenance**, and **Information**. The following sections describe the available information for each of the sub-menus in detail.

3.3.1 Auto-Scroll Display

The table below lists the auto-scroll parameters:

Parameter Categories		Measurements			
U/Freq.	Display 1	U1	U2	U3	Freq.
3Φ SMx (x=1-8)	Display 2 (SM1)	P Tot	Q Tot	S Tot	PF
	Display 3 (SM2)	P Tot	Q Tot	S Tot	PF
	Display 4 (SM3)	P Tot	Q Tot	S Tot	PF
	Display 5 (SM4)	P Tot	Q Tot	S Tot	PF
	Display 6 (SM5)[1]	P Tot	Q Tot	S Tot	PF
	Display 7 (SM6)[1]	P Tot	Q Tot	S Tot	PF
	Display 8 (SM7)[1]	P Tot	Q Tot	S Tot	PF
	Display 9 (SM8)[1]	P Tot	Q Tot	S Tot	PF
Temp.	Display 10	TC1[2]	TC2[2]	TC3[2]	TC4[2]
Ir	Display 11	Ir1[3]	Ir2[4]	Ir3[4]	Ir4[4]

Table 3-4 Auto-Scroll Display Pages

Notes:

1) Available when the device is equipped with **8x3-Φ SMs** option.
2) Available when the device is equipped with **4xNTC** option.
3) Available when the device is equipped with **1xIR** or **4xIR** option.
4) Available when the device is equipped with **4xIR** option.

3.3.2 Metering

The available sub-menus are: **Present Data**, **Energy Data, Basic Harm., Demand** and **Diagnostics Status.**

3.3.2.1 Present Data

The following table illustrates the available measurements under the **Metering > Present Data** sub-menu.

Categories/Display Screens			Measurements			
U		Display 1	U1[1]	U2[1]	U3[1]	Ulnavg[1]
		Display 2	U12	U23	U31	Ullavg
		Display 3	Freq.	U Unb.	Ir[2]	
		Display 4[3]	Ir1	Ir2	Ir3	Ir4
		Display 5[4]	TC1	TC2	TC3	TC4
		Display 6	U1 Ang	U2 Ang	U3 Ang	
3Φ SMx (x=1-4 or 1-8)	**SM1**	Display 1	I1	I2	I3	Iavg
		Display 2	P1	P2	P3	P Tot
		Display 3	Q1	Q2	Q3	Q Tot
		Display 4	S1	S2	S3	S Tot
		Display 5	PF1	PF2	PF3	PF
		Display 6	I1 Ang	I2 Ang	I3 Ang	
		Display 7	I Unb.	In		
	...	...	...	...	...	...
	SM4	Display 1	I1	I2	I3	Iavg
		Display 2	P1	P2	P3	P Tot
		Display 3	Q1	Q2	Q3	Q Tot
		Display 4	S1	S2	S3	S Tot
		Display 5	PF1	PF2	PF3	PF
		Display 6	I1 Ang	I2 Ang	I3 Ang	
		Display 7	I Unb.	In		
	SM5[5]	Display 1	I1	I2	I3	Iavg
		Display 2	P1	P2	P3	P Tot
		Display 3	Q1	Q2	Q3	Q Tot
		Display 4	S1	S2	S3	S Tot
		Display 5	PF1	PF2	PF3	PF
		Display 6	I1 Ang	I2 Ang	I3 Ang	
		Display 7	I Unb.	In		
	...[5]	**...**	**...**	**...**	**...**	**...**
	SM8[5]	Display 1	I1	I2	I3	Iavg
		Display 2	P1	P2	P3	P Tot
		Display 3	Q1	Q2	Q3	Q Tot
		Display 4	S1	S2	S3	S Tot
		Display 5	PF1	PF2	PF3	PF
		Display 6	I1 Ang	I2 Ang	I3 Ang	
		Display 7	I Unb.	In		
		Display 1	I1	I2	I3	Iavg
1Φ SMx (x=1-12 or 1-24)	**SM1**	Display 1	I	PF	I Ang	
		Display 2	P	Q	S	
	...	...	...	...	...	
	SM12	Display 1	I	PF	I Ang	
		Display 2	P	Q	S	
	SM13[5]	Display 1	I	PF	I Ang	
		Display 2	P	Q	S	
	...[5]	...	...	...	...	
	SM24[5]	Display 1	I	PF	I Ang	
		Display 2	P	Q	S	

Table 3-5 Metering Display Pages

Notes:

1) When the wiring mode is **3P3W**, U1/U2/U3 phase voltages are not available.
2) Available when the device is equipped with **1xIR** option.
3) Available when the device is equipped with **4xIR** option.
4) Available when the device is equipped with **4xNTC** option**.**
5) Available when the device is equipped with **8x3-Φ SMs** option.

3.3.2.2 Energy Data

The following table illustrates the available measurements under the **Metering > Energy Data** sub-menu.

Categories/Display Screens			Measurements	
3Φ SMx (x=1-4 or 1-8)	**SM1**	Display 1	kWh Imp.	kWh Exp.
		Display 2	kWh Net	kWh Tot.
		Display 3	kvarh Imp.	kvarh Exp.
		Display 4	kvarh Net	kvarh Tot.
	…	…	…	…
	SM4	Display 1	kWh Imp.	kWh Exp.
		Display 2	kWh Net	kWh Tot.
		Display 3	kvarh Imp.	kvarh Exp.
		Display 4	kvarh Net	kvarh Tot.
	SM5[1]	Display 1	kWh Imp.	kWh Exp.
		Display 2	kWh Net	kWh Tot.
		Display 3	kvarh Imp.	kvarh Exp.
		Display 4	kvarh Net	kvarh Tot.
	…[1]	…	…	…
	SM8[1]	Display 1	kWh Imp.	kWh Exp.
		Display 2	kWh Net	kWh Tot.
		Display 3	kvarh Imp.	kvarh Exp.
		Display 4	kvarh Net	kvarh Tot.
1Φ SMx (x=1-12 or 1-24)	**SM1**	Display 1	kWh Imp.	kWh Exp.
		Display 2	kWh Net	kWh Tot.
		Display 3	kvarh Imp.	kvarh Exp.
		Display 4	kvarh Net	kvarh Tot.
	…	…	…	…
	SM12	Display 1	kWh Imp.	kWh Exp.
		Display 2	kWh Net	kWh Tot.
		Display 3	kvarh Imp.	kvarh Exp.
		Display 4	kvarh Net	kvarh Tot.
	SM13[1]	Display 1	kWh Imp.	kWh Exp.
		Display 2	kWh Net	kWh Tot.
		Display 3	kvarh Imp.	kvarh Exp.
		Display 4	kvarh Net	kvarh Tot.
	…[1]	…	…	…
	SM24[1]	Display 1	kWh Imp.	kWh Exp.
		Display 2	kWh Net	kWh Tot.
		Display 3	kvarh Imp.	kvarh Exp.
		Display 4	kvarh Net	kvarh Tot.

Table 3-6 Energy Data

Notes:

1) Available when the device is equipped with **8x3-Φ SM** option.

3.3.2.3 Basic Harm.

The following table illustrates the available measurements under the **Metering > Basic Harm.** sub-menu.

Categories/Display Screens			Measurements		
U		Display 1	U1/U2/U3 THD	U1/U2/U3 TOHD	U1/U2/U3 TEHD
		Display 2	U1/U2/U3 HD02	U1/U2/U3 HD03	U1/U2/U3 HD04
		…	…	…	…
		Display 11	U1/U2/U3 HD29	U1/U2/U3 HD30	U1/U2/U3 HD31
3Φ SMx (x=1-4 or 1-8)	**SM1**	Display 1	I1/I2/I3 THD	I1/I2/I3 TOHD	I1/I2/I3 TEHD
		Display 2	I1/I2/I3 HD02	I1/I2/I3 HD03	I1/I2/I3 HD04
		…	…	…	…
		Display 11	I1/I2/I3 HD29	I1/I2/I3 HD30	I1/I2/I3 HD31
	…	…	…	…	…
	SM4	Display 1	I1/I2/I3 THD	I1/I2/I3 TOHD	I1/I2/I3 TEHD
		Display 2	I1/I2/I3 HD02	I1/I2/I3 HD03	I1/I2/I3 HD04
		…	…		
		Display 11	I1/I2/I3 HD29	I1/I2/I3 HD30	I1/I2/I3 HD31
	SM5[1]	Display 1	I1/I2/I3 THD	I1/I2/I3 TOHD	I1/I2/I3 TEHD
		Display 2	I1/I2/I3 HD02	I1/I2/I3 HD03	I1/I2/I3 HD04
		…	…	…	…

		Display 11	I1/I2/I3 HD29	I1/I2/I3 HD30	I1/I2/I3 HD31
	...[1]	...	...	...	...
	SM8[1]	Display 1	I1/I2/I3 THD	I1/I2/I3 TOHD	I1/I2/I3 TEHD
		Display 2	I1/I2/I3 HD02	I1/I2/I3 HD03	I1/I2/I3 HD04
		...	...	...	...
		Display 11	I1/I2/I3 HD29	I1/I2/I3 HD30	I1/I2/I3 HD31

Table 3-7 Basic Harm.

Notes:

1) Available when the device is equipped with **8x3-Φ SM** option.

3.3.2.4 Demand

The following table illustrates the available measurements under the **Metering > Demand** sub-menu.

Categories/Display Screens		Measurements			
3Φ SM1	Display 1	P1	P2	P3	P Tot
	Display 2	Q1	Q2	Q3	Q Tot
	Display 3	S1	S2	S3	S Tot
	Display 4	I1	I2	I3	
...	...	...	...	...	...
3Φ SM4	Display 1	P1	P2	P3	P Tot
	Display 2	Q1	Q2	Q3	Q Tot
	Display 3	S1	S2	S3	S Tot
	Display 4	I1	I2	I3	
3Φ SM5[1]	Display 1	P1	P2	P3	P Tot
	Display 2	Q1	Q2	Q3	Q Tot
	Display 3	S1	S2	S3	S Tot
	Display 4	I1	I2	I3	
...	...	...	...	...	...
3Φ SM8[1]	Display 1	P1	P2	P3	P Tot
	Display 2	Q1	Q2	Q3	Q Tot
	Display 3	S1	S2	S3	S Tot
	Display 4	I1	I2	I3	

Table 3-8 Demand

Notes:

1) Available when the device is equipped with **8x3-Φ SM** option.

3.3.2.5 Diagnostics Status

The following table illustrates the available measurements under the **Metering > Diagnostics Status** sub-menu.

Categories/Display Screens		Measurements			
U	Display 1	Wire Status	Freq. Fault	U Loss	U Seq. Fault
3Φ SM1	Display 1	Wire Status	I Loss	I Seq. Fault	P Tot. Neg.
	Display 2	P1 Neg.	P2 Neg.	P3 Neg.	
...	...	...	...	...	...
3Φ SM4	Display 1	Wire Status	I Loss	I Seq. Fault	P Tot. Neg.
	Display 2	P1 Neg.	P2 Neg.	P3 Neg.	
3Φ SM5[1]	Display 1	Wire Status	I Loss	I Seq. Fault	P Tot. Neg.
	Display 2	P1 Neg.	P2 Neg.	P3 Neg.	
...	...	...	...	...	...
3Φ SM8[1]	Display 1	Wire Status	I Loss	I Seq. Fault	P Tot. Neg.
	Display 2	P1 Neg.	P2 Neg.	P3 Neg.	

Table 3-9 Diagnostics Status

Notes:

1) Available when the device is equipped with **8x3-Φ SM** option.

3.3.3 View Setup

The **View Setup** menu displays the same content as the **Setup** menu, but does not allow parameter setting, please refer to **Section 3.4.3** for details.

3.3.4 SOE Log

The PMC-512-M supports the display of the SOE Log with its relevant parameter values and its timestamp. The users can scroll through the SOE Log by pressing ▼, ▲, ◀ or ▶.
Two examples of SOE Log Display:

SOE Log 01/14	SOE Log 08/14
001. Power On 2026/04/22 19:42:55.004	011. UC U H Return Record Value: 0.000V 2026/02/22 01:35:45.551

Figure 3-2 Examples of Event Log Display

3.4 Setup and Maintenance via the Front Panel

3.4.1 Making Setup Changes

1) Entering the Password:

- Press <↵> to enter the **Main Menu**.
- Press <▼>, <▲>, <◀> or <▶> to advance to the **Setup** menu.
- A correct password must be entered before changes are allowed. The factory default password is "0000".
- Press <◀> or <▶> to shift the cursor and press <▲> or <▼> to increment or decrement the numeric value for the password.
- When the password has been entered, pressing <↵> will enter the **Setup** sub-menu if the password is correct.

2) Selecting a parameter to change:

- Press <▼>, <▲>, <◀> or <▶> to scroll to the desired sub-menu or parameter.
- Press <↵> to select the sub-menu or parameter for configuration.
- Press <⇦> to return to the previous menu level.
- Repeat Step 2 until all the desired setup parameters have been selected.

3) Changing and saving a setup parameter:

- For a numeric parameter, press <◀> or <▶> to shift the cursor to the left or right by one position or press <▲> or <▼> to increment or decrement the numeric value.
- For an enumerated parameter, press <▲> or <▼> to scroll backward and forward in the selection list.
- After modification, press <⇦> and <↵> to save the change into memory or press <⇦> again to exit the currently selected parameter without change.
- Repeat steps 2) and 3) if necessary.

4) Exiting the Setup Configuration Mode

- Press <⇦> to return to the **Main Menu**.
- Also, the **Setup Configuration Mode** will be automatically exited if there is a period of inactivity of 5 minutes or longer.

3.4.2 Setup Menu

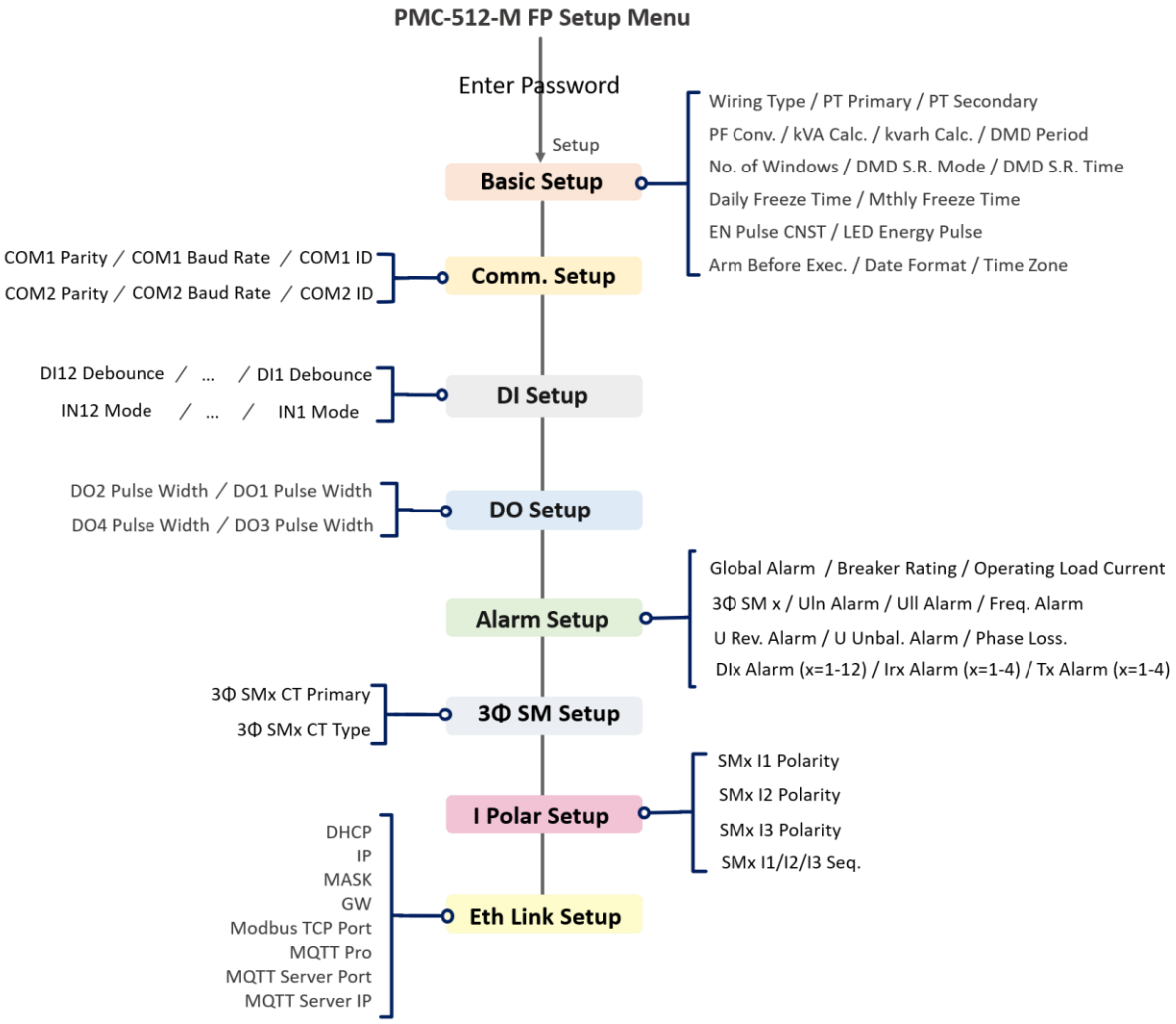

Figure 3-3 Setup Menu

3.4.3 Configuration

The **Setup Configuration Mode** provides access to the following setup parameters:

Label Menu 1st 2nd 3rd	Description	Range	Default
Password	Enter Password	0000 to 9999	0000
Basic Setup			
Wiring Type	Meter's Wiring Connection	DEMO/3P4W/3P3W /1P2W_LN	3P4W
PT Primary	PT Primary	1 to 1,000,000V	380V
PT Secondary	PT Secondary	1 to 450V	380V
PF Conv.	PF Convention[1]	IEC/IEEE/-IEEE	IEC
kVA Calc.	kVA Calculation Method[2]	Vector/Scalar	Vector
kvarh Calc.	kvarh Calculation Method	RMS/Fund	RMS
DMD Period	Demand Interval	1 to 60 min	1
No. of Windows	Number of Sliding Windows	1 to 15	15
DMD S.R. Mode	Self-Read Mode for Demand	Auto/Clear	Auto
DMD S.R. Time	Self-Read Time for Demand	See Note 3)	01D00H
Daily Freeze Time	Self-Read Time for Daily Freeze Log	See Note 3)	00H00M
Mthly Freeze Time	Self-Read Time for Monthly Freeze Log	See Note 4)	00D00H
EN Pulse CNST	LED Energy Pulse Constant	10/500/5000/ 10000/50 imp/kXh	500

LED Energy Pulse	Specifies which kWh/kvarh will be enabled as the LED Energy Pulse	Disable, 3Φ SMx P/Q[5] (x=1-8)	Disable
Arm Before Exec.	Enable Arm before Execute Remote Control	Enable/Disable	Disable
Date Format	Set Date Format	YYYY/MM/DD MM/DD/YYYY DD/MM/YYYY	YYYY/MM/DD
Time Zone	Set Time Zone	See Note 6)	GMT+08:00
Comm. Setup			
COM1 ID	COM1 Modbus Address	1 to 247	100[7]
COM1 Baud Rate	COM1 Data rate in bits per second	1200/2400/4800/9600/ 19200/38400	9600
COM1 Parity	COM1 Data Format	8N2/8O1/8E1/8N1/ 8O2/8E2	8E1
COM2 ID	COM2 Modbus Address	1 to 247	101[7]
COM2 Baud Rate	COM2 Data rate in bits per second	1200/2400/4800/9600/ 19200/38400	9600
COM2 Parity	COM2 Data Format	8N2/8O1/8E1/8N1/ 8O2/8E2	8E1
DI Setup[8]			
DI1 Debounce … DI12 Debounce	DI1 to DI12 Debounce Time	20~9999 ms	40
DI 1 Mode … DI12 Mode	DI1 to DI12 Function mode	AC, DC	AC
DO Setup[8]			
DO1 Pulse Width DO2 Pulse Width DO3 Pulse Width DO4 Pulse Width	Pulse Width for DO1 to DO4	0 to 6000 (x0.1s) (0=Latch Mode)	1.0s
Alarm Setup			
Global Alarm			
Set Breaker Rating	Synchronize SM1's Breaker Rating/Alarm settings/DI settings to other SMs	Yes, No	No
Set 3Φ SM Param		Yes, No	No
Set DI Alarm Param		Yes, No	No
Breaker Rating			
3Φ SM1 … 3Φ SM4 3Φ SM5[8] … 3Φ SM8[8]	Set breaker rating for 3-Φ SMs. This parameter is used for Current presence detection and alarm.	1~30000A	32A
Operating Load Current			
ON/OFF Threshold	Current ON Threshold	0 to 100 (x0.1)	5%
ON Delay	Current ON Delay	0 to 9999(s)	10s
OFF Delay	Current OFF Delay	0 to 9999(s)	30s
3Φ SMx (x=1-8)			
I Alarm			
Enable	I Alarm Enable	None, A ☐ B ☐ C ☐	None
I H Limit	I H Alarm Threshold	0~1000 (%A)	0
I H Delay	I H Alarm Delay	0~9999s	0
I L Limit	I L Alarm Threshold	0~1000 (%A)	0
I L Delay	I L Alarm Delay	0~9999s	0
Trigger	I Alarm Trigger	Disabled, DO1/DO2/DO3/DO4	Disabled
P Alarm			
Enable	P Alarm Enable	None, A ☐ B ☐ C ☐ TOT ☐	None
H Limit	P H Alarm Threshold	0~999,999 (W)	1000 W
H Delay	PL H Alarm Delay	0~9999 (s)	10 s
L Limit	P L Alarm Threshold	0~999,999 (W)	0 W
L Delay	P L Alarm Delay	0~9999 (s)	10 s
Trigger	P Alarm Trigger	Disabled, DO1/DO2/DO3/DO4	Disabled
Q Alarm			

Enable	Q Alarm Enable	None, A □ B □ C □ TOT □	None
H Limit	Q H Alarm Threshold	0~999,999 (var)	1000 var
H Delay	Q H Alarm Delay	0~9999 (s)	10 s
L Limit	Q L Alarm Threshold	0~999,999 (var)	0 var
L Delay	Q L Alarm Delay	0~9999 (s)	10 s
Trigger	Q Alarm Trigger	Disabled, DO1/DO2/DO3/DO4	Disabled
S Alarm			
Enable	S Alarm Enable	None, A □ B □ C □ TOT □	None
H Limit	S H Alarm Threshold	0~999,999 (VA)	1000 VA
H Delay	S H Alarm Delay	0~9999 (s)	10 s
L Limit	S L Alarm Threshold	0~999,999 (VA)	0 VA
L Delay	S L Alarm Delay	0~9999 (s)	10 s
Trigger	S Alarm Trigger	Disabled, DO1/DO2/DO3/DO4	Disabled
I Unb. Alarm[7]			
Enable	I Unb. Alarm Enable	Disable, Enable	Disable
Alarm Limit	I Unbal. Alarm Threshold	0 to 1000 (%)	10.0%
Alarm Delay	I Unbal. Alarm Delay	0 to 9999 (s)	10 s
Trigger	I Unbal. Alarm Trigger	Disabled, DO1/DO2/DO3/DO4	Disabled
I Rev. Alarm[7]			
Enable	I Phase Reversal Alarm Enable	Disable, Enable	Disable
Trigger	I Phase Reversal Alarm Trigger	Disabled, DO1/DO2/DO3/DO4	Disabled
Uln Alarm[9]			
Enable	Uln Alarm Enable	None, A □ B □ C □	None
U H Limit	Over Uln Alarm Threshold	0~6000 (x0.1V)	0
U H Delay	Over Uln Alarm Delay	0 to 9999 (s)	0
U L Limit	Under Uln Alarm Threshold	0~6000 (x0.1V)	0.0
U L Delay	Under Uln Alarm Delay	0 to 9999 (s)	0
Trigger	Uln Alarm Trigger	Disabled, DO1/DO2/DO3/DO4	Disabled
Ull Alarm[10]			
Enable	Ull Alarm Enable	None, AB □ BC □ CA □	
U H Limit	Over Ull Alarm Threshold	0~10000 (x0.1V)	0
U H Delay	Over Ull Alarm Delay	0 to 9999 (s)	0
U L Limit	Under Ull Alarm Threshold	0~15000 (x0.1V)	0
U L Delay	Under Ull Alarm Delay	0 to 9999 (s)	0
Trigger	Ull Alarm Trigger	Disabled, DO1/DO2/DO3/DO4	Disabled
Freq. Alarm			
H Limit	Freq. H Alarm Threshold	45.00~65.00 (Hz)	65.00 Hz
H Delay	Freq. H Alarm Delay	0~9999 (s)	10 s
L Limit	Freq. L Alarm Threshold	45.00~65.00 (Hz)	45.00 Hz
L Delay	Freq. L Alarm Delay	0~9999s	10 s
Trigger	Frequency Alarm Trigger	Disabled, DO1/DO2/DO3/DO4	Disabled
U Rev. Alarm[9]			
Enable	U Phase Reversal Alarm Enable	Disable, Enable	Disable
Trigger	Phase Reversal Alarm Trigger	Disabled, DO1/DO2/DO3/DO4	Disabled
U Unb. Alarm[9]			
Enable	U Unb. Alarm Enable	Disable, Enable	Disable
Alarm Limit	U Unbal. Alarm Threshold	0 to 1000 (x0.1%)	10.0%
Alarm Delay	U Unbal. Alarm Delay	0 to 9999 (s)	10 s
Trigger	U Unbal Alarm Trigger	Disabled, DO1/DO2/DO3/DO4	Disabled
U Loss[9]			
Enable	Phase Loss. Alarm Enable	Disabled, Enabled	Disabled
Alarm Delay	Phase Loss. Alarm Delay	0 to 9999 (s)	10s
Trigger	Phase Loss. Alarm Trigger	Disabled, DO1/DO2/DO3/DO4	Disabled
DIx Alarm (x=1-12)[8]			
Enable	DIx Alarm Enable	Disabled, Enabled	Disabled
Alarm Delay	DIx Alarm Delay	0 to 9999 (s)	0s

Trigger	DIx Alarm Trigger	Disabled, DO1/DO2/DO3/DO4	Disabled
Irx Alarm (x=1-4)[8]			
Enable	Irx Alarm Enable	Disable, Enable	Disable
Alarm Limit	Irx Alarm Threshold	0 to 60000 (x0.1mA)	0.0 mA
Alarm Delay	Irx Alarm Delay	0 to 9999 (s)	10 s
Trigger	Irx Alarm Trigger	Disabled, DO1/DO2/DO3/DO4	Disabled
Tx Alarm (x=1-4)[8]			
Enable	Temperature x Alarm Enable	Disable, Enable	Disable
Alarm Limit	Temperature x Alarm Threshold	0 to 10000 (x0.1°C)	0 °C
Alarm Delay	Temperature x Alarm Delay	0 to 9999 (s)	10 s
Trigger	Temperature x Alarm Trigger	Disabled, DO1/DO2/DO3/DO4	Disabled
3Φ SM Setup			
3Φ SM1 CT Primary	3Φ SM1 CT Primary	1 to 60000A	100
3Φ SM1 CT Type	3Φ SM1 CT Type	Close, Open	Open
...	...	...	...
3Φ SM4 CT Primary	3Φ SM4 CT Primary	1 to 60000A	100
3Φ SM4 CT Type	3Φ SM4 CT Type	Close, Open	Open
3Φ SM5 CT Primary[5]	3Φ SM5 CT Primary	1 to 60000A	100
3Φ SM5 CT Type[5]	3Φ SM5 CT Type	Close, Open	Open
...	...	...	...
3Φ SM8 CT Primary[5]	3Φ SM8 CT Primary	1 to 60000A	100
3Φ SM8 CT Type[5]	3Φ SM8 CT Type	Close, Open	Open
I Polar Setup			
SM1 I1 Polarity	SM1 I1 Polarity	Import, Export	Import
SM1 I2 Polarity	SM1 I2 Polarity		Import
SM1 I3 Polarity	SM1 I3 Polarity		Import
SM1 I1/I2/I3 Seq.	SM1 I1/I2/I3 Seq.	I1/I2/I3, I2/I1/I3 I3/I2/I1, I1/I3/I2 I3/I1/I2, I2/I3/I1	I1/I2/I3
...	...	...	...
SM4 I1 Polarity	SM4 I1 Polarity	Import, Export	Import
SM4 I2 Polarity	SM4 I2 Polarity		Import
SM4 I3 Polarity	SM4 I3 Polarity		Import
SM4 I1/I2/I3 Seq.	SM4 I1/I2/I3 Seq.	I1/I2/I3, I2/I1/I3 I3/I2/I1, I1/I3/I2 I3/I1/I2, I2/I3/I1	I1/I2/I3
SM5 I1 Polarity[8]	SM5 I1 Polarity	Import, Export	Import
SM5 I2 Polarity[8]	SM5 I2 Polarity		Import
SM5 I3 Polarity[8]	SM5 I3 Polarity		Import
SM5 I1/I2/I3 Seq. [8]	SM5 I1/I2/I3 Seq.	I1/I2/I3, I2/I1/I3 I3/I2/I1, I1/I3/I2 I3/I1/I2, I2/I3/I1	I1/I2/I3
...	...	...	...
SM8 I1 Polarity[8]	SM8 I1 Polarity	Import, Export	Import
SM8 I2 Polarity[8]	SM8 I2 Polarity		Import
SM8 I3 Polarity[8]	SM8 I3 Polarity		Import
SM8 I1/I2/I3 Seq. [8]	SM8 I1/I2/I3 Sequence	I1/I2/I3, I2/I1/I3 I3/I2/I1, I1/I3/I2 I3/I1/I2, I2/I3/I1	I1/I2/I3
Eth Link Setup[8]			
DHCP	Enable DHCP	Disable, Enable	Disable
IP	Ethernet IP Address		192.168.0.100
MASK	Ethernet Subnet Mask		255.255.255.0
GW	Ethernet Gateway		192.168.0.1
MODBUS-TCP Port	Modbus TCP Port	1 to 65535	502
MQTT Pro	MQTT protocol	CetMQTT, Reserved	CetMQTT
Server Port	MQTT Server Port	1 to 65535	1883
Server IP	MQTT Server IP Address		000.000.000.000

Table 3-10 Setup Parameters

Notes:

1) Power Factor Convention (-IEEE is the same as IEEE but with the opposite sign):

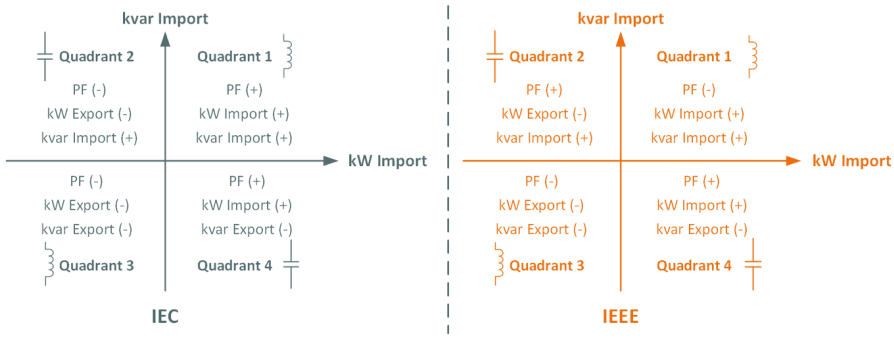

Figure 3-4 PF Convention

2) There are two ways to calculate kVA:

Mode V (Vector method): $kVA_{total} = \sqrt{kW_{total}^{2} + kvar_{total}^{2}}$

Mode S (Scalar method): $kVA_{total} = kVA_a + kVA_b + kVA_c$

3) The **DMD S.R. Time** supports the following three options:
   a. A zero value means that the Self-Read will take place at 00:00 of the first day of each month.
   b. A non-zero value means that the Self-Read will take place at a specific time and day based on the formula: Self-Read Time = (Day x 100 + Hour) where 0 ≤ Hour ≤ 23 and 1 ≤ Day ≤ 28. For example, the value 1512 means that the Self-Read will take place at 12:00pm on the 15th day of each month.
   c. A 0xFFFF value will disable the Self-Read operation and replace it with manual operation. A manual reset will cause the Max. Demand of **This Month** to be transferred to the Max. Demand of **Last Month** and then reset. The terms **This Month** and **Last Month** will become **Since Last Reset** and **Before Last Reset**.
4) The **Mthly Freeze Time** supports the following two options:
   a. A zero value means that the Self-Read will take place at 00:00 of the first day of each month.
   b. A non-zero value means that the Self-Read will take place at a specific time and day based on the formula: Self-Read Time = (Day x 100 + Hour) where 0 ≤ Hour ≤ 23 and 1 ≤ Day ≤ 28. For example, the value 1512 means that the Self-Read will take place at 12:00pm on the 15th day of each month.
5) For the **LED Energy Pulse**, 3Φ SMx P = 3-Φ SMx kWh Total while 3Φ SMx Q = 3-Φ SMx kvarh Total.
6) The following table lists the supported Time Zones:

Code	Time Zone	Code	Time Zone	Code	Time Zone
0	GMT-12:00	**11**	GMT-02:00	**22**	GMT+05:45
1	GMT-11:00	**12**	GMT-01:00	**23**	GMT+06:00
2	GMT-10:00	**13**	GMT+00:00	**24**	GMT+06:30
3	GMT-09:00	**14**	GMT+01:00	**25**	GMT+07:00
4	GMT-08:00	**15**	GMT+02:00	**26**	GMT+08:00
5	GMT-07:00	**16**	GMT+03:00	**27**	GMT+09:00
6	GMT-06:00	**17**	GMT+03:30	**28**	GMT+09:30
7	GMT-05:00	**18**	GMT+04:00	**29**	GMT+10:00
8	GMT-04:00	**19**	GMT+04:30	**30**	GMT+11:00
9	GMT-03:30	**20**	GMT+05:00	**31**	GMT+12:00
10	GMT-03:00	**21**	GMT+05:30	**32**	GMT+13:00

Table 5-1 Time Zones

7) If the last 2 digits of SN is 00, the default ID should be 100.
8) Available when the device is equipped with corresponding options.
9) This parameter is unavailable when the wiring mode is 3P3W or1P2W L-N.
10) This parameter is unavailable when the wiring mode is 1P2W L-N.

3.4.4 Maintenance

Menu	Parameter		Range	Default
Clock Setup	Date		YYYY/MM/DD	-
	Time		hh:mm:ss	
Maintenance	Display	Timeout	0 to 60 min	5
		Contrast	0 to 9	5
		Language	English	English
	Password Setup	Set New Password	0 to 9999	0000
Clear Energy	Clear all Energy data		Yes/No	No
Clear Max. Demands	Clear Max. Demand Log of This Month (Since Last Reset)		Yes/No	No

Clear SOE	Clear SOE Logs	Yes/No	No
Clear All Demand	Clear All Demand Logs	Yes/No	No
Clear DR Log	Clear All DR Logs	Yes/No	No
	Clear DR1		
	…		
	Clear DR5		
Clear Daily Freeze Log	Clear Daily Freeze Logs	Yes/No	No
Clear Mthly Freeze Log	Clear Monthly Freeze Logs	Yes/No	No
Clear All Data	Clear All of the above	Yes/No	No
Threshold Setup	I Threshold	0 to 10000 (x0.01%)	7%
	U Threshold	0 to 2000 (x0.1V)	10.0V
	Indu. Volt. Threshold	0~100 (%)	45%

Table 3-11 Maintenance Parameters

Notes:

1) If the BLTO is set to 0, the Time Out is disabled, which means that the Backlight will always be on.

3.4.5 Information

Parameters	Description
Firmware Version	Firmware Version
Modbus Version	Modbus Protocol Version
Update	Firmware Version Date
SN	Serial Number
IP[1]	192.168.000.100
MASK[1]	255.255.255.000
GW[1]	192.168.000.001

Table 3-12 Information Display Pages

Notes:

1) Available when the device is equipped with corresponding options.

Chapter 4 Applications

4.1 Inputs and Outputs

4.1.1 Digital Inputs

The PMC-512-M optionally features 12 active-contact Digital Inputs (COM, IN1 ~ IN12). These DIs support 220 VAC/DC external excitation, with a sampling frequency of 1000Hz and programmable debounce. The DI can be used for the status monitoring which can help if a circuit is energized, detect breaker status or prevent misoperation to equipment. The real-time statues of the Digital Inputs are available from the front panel or through communications. Changes in Digital Input status are stored as events in the SOE Log in 1 ms resolution.

The following table describes the DI's setup parameters:

Setup Parameter	Definition	Options/Default*
DIx Mode	Specifies the mode of the DI.	0 = AC*, 1 = DC
DIx Debounce	Specifies the minimum duration the DI must remain in the Active or Inactive state before a DI state change is considered to be valid.	20 to 9999 (ms) (Default = 40ms)

Table 4-1 DI Setup Parameters

4.1.2 Digital Outputs

The PMC-512-M comes standard with one or optionally up to four Form A Electrometrical Relays. Digital Outputs are normally used for setpoint alarming and manual control.

1) **Remote Control** Remotely operated over communications or the PecStar® iEMS Integrated Energy Management System.
2) **Alarm Setpoint** Digital outputs on the PMC-512-M can be programmed to be triggered by any type of alarm, please refer to **Section 3.4.3** for details.

DOs on the PMC-512-M have the following setup parameters:

Setup Parameter	Definition	Options/Default*
Arm before Execute	Enable or disable the Arm Before Execute feature for the DO.	0=Enabled*, 1=Disabled
DOx Pulse Width (x=1 or 4)	Specifies if the duration for which the relay output will be active when an alarm Trigger command is received to operate it	0* to 6000 (x 0.1s) 0 (Latch Mode)

Table 4-2 DO Setup Parameters

Remote Control and Alarm Setpoint share the same priority, meaning that they can all be programmed to control the same Digital Output. This scheme is equivalent to having an implicit Logical OR operation for the control of a Digital Output and may be useful in providing a generic alarm output signal. However, the sharing of a Digital Output is not recommended if the user intends to generate a control signal in response to a specific setpoint condition.

4.1.3 Energy Pulse Outputs

The PMC-512-M comes standard with one front panel LED Pulse Output for kWh/kvarh pulsing. Energy pulsing mode can be programmed from the Front Panel or through communications via the LED EN Pulse setup parameter. Energy Pulse Outputs are typically used for accuracy testing. The pulse constant can be configured as 10/50/500/5000/10000 imp/kxh (kWh/kvarh).

4.1.4 IR Input (Optional)

The PMC-512-M can be optionally equipped with up to four IR inputs for Residual Current measurement via external Residual Current transformers. The IR measurement can be set as the Setpoint Source to trigger an alarm when a threshold value is exceeded. The 3-Phase and Neutral conductors should be wired through the Residual Current CT without the PE (Protective Earth) wire as illustrated below.

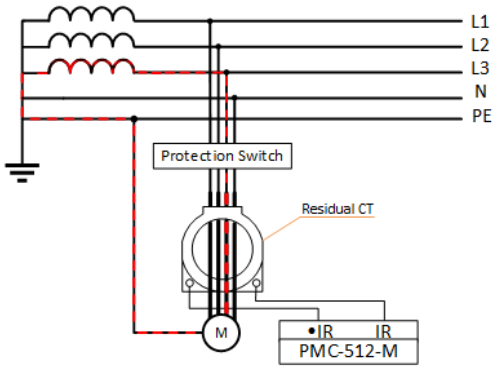

Figure 4-1 Example for Residual Current Measurement

4.1.5 NTC Input (Optional)

The PMC-512-M optionally provides four NTC Inputs for temperature measurements. The NTC sensors are optional and not included. The PMC-512-M can provide accurate temperature monitoring with the optional NTC inputs for measuring the temperature of the Neutral Conductor, Transformer or other equipment. The temperature measurement can be set as the Setpoint Source to trigger an alarm when a threshold value is exceeded.

4.2 Power and Energy

4.2.1 Basic Measurements

The PMC-512-M provides the following basic measurements which can be accessed via the Front Panel or through the communication:

- ULN & ULL per Phase and Average
- Optional Ir
- Frequency
- Temperature
- 1-Φ Sub Meters (SM): I, P, Q, S, PF
- 3-Φ Sub Meters (SM)
  - I per Phase and Average, and In (Calculated)
  - P, Q, S, PF per Phase and Total
  - Fundamental P and PF, per-phase fundamental P and PF
  - Harmonic P and per-phase harmonic P

4.2.2 Energy Measurements

The PMC-512-M provides Energy parameters for active energy (kWh), reactive energy (kvarh) and apparent energy (kVAh) with a resolution of 0.1 and a maximum value of 100,000,000.0. When the maximum value is reached, the energy registers will automatically roll over to zero. The energy registers can be reset manually via Front Panel or through communications for all SMs.

The PMC-512-M provides the following energy measurements:

	3-Phase Energy	Per-Phase Energy (Phase A/B/C)
1-Φ SMs	kWh Import/Export/Net/Total, kvarh Import/Export/Net/Total	
3-Φ SMs	kWh Import/Export/Net/Total, kvarh Import/Export/Net/Total kWh Import/Export of T1-T6 kvarh Import/Export of T1-T6	kWh Import/Export/Net/Total, kvarh Import/Export/Net/Total kWh Import/Export of T1-T6 kvarh Import/Export of T1-T6

Table 4-3 Energy Measurements

4.2.3 Demands

Demand is defined as the average power consumption over a fixed interval (usually 15 minutes) based on the sliding window method. The PMC-512-M provides Present Demand for 3-Φ SMs, including P/Q/S Total, per-phase P/Q/S/I. In addition, the PMC-512-M supports Max. Demand recording for This Month (Since Last Reset) and Last Month (Before Last Reset), covering P/Q total and per-phase P/Q/I for 3-Φ SMs.

The PMC-512-M provides the following Demand setup parameters which can be programmed via Front Panel or through communications:

Setup Parameter	Definition	Options
Demand Period	1 to 60 minutes. For example, if the **# of Sliding Windows** is set as 1 and the **Demand Period** is 15, the demand cycle will be 1×15=15min.	1 to 60 minutes Default=15
# of Sliding Windows	Number of Sliding Windows.	1 to 15 Default=1
Self-Read Time	The **Self-Read Time** allows the user to specify the time and day of the month for the Max. Demand Self-Read operation. The **Self-Read Time** supports three options: • A zero value means that the **Self-Read** will take place at 00:00 of the first day of each month. • A non-zero value means that the **Self-Read** will take place at a specific time and day based on the formula: **Self-Read Time** = Day x 100 + Hour where 0 ≤ Hour ≤ 23 and 1 ≤ Day ≤ 28. For example, the value 1512 means that the Self-Read will take place at 12:00pm on the 15th day of each month. • A 0xFFFF value will disable the Self-Read operation and replace it with manual operation. A manual reset will cause the Max. Demand of **This Month** to be transferred to the Max. Demand of **Last Month** and then reset. The terms **This Month** and **Last Month** will become **Since Last Reset** and **Before Last Reset**.	Default=0

Table 4-4 Demand Setup

4.3 Power Quality

4.3.1 Phase Angles

Phase analysis is used to identify the angle relationship between voltages and currents. The PMC-512-M provides Current Phase Angle measurements for 1-Φ SMs and 3-Φ SMs and Voltage Phase Angle.

For WYE connected systems, the per phase difference of the current and voltage angles should correspond to the per phase PF. For example, if the power factor is 0.5 Lag and the voltage phase angles are 0.0°, 240.0° and 120.0°, the current phase angles should have the values of -60.0°, 180.0° and 60.0°.

4.3.2 Unbalance

The PMC-512-M provides voltage unbalance measurement, as well as current unbalance measurement for 3-Φ SMs. The calculation method of Voltage and Current Unbalances are listed below:

$$\text{Voltage Unbalance} = \frac{V2}{V1} \times 100\% \qquad \text{Current Unbalance} = \frac{I2}{I1} \times 100\%$$

where

V1, V2 are the Positive and Negative Sequence Components for Voltage, respectively.

and I1, I2 are the Positive and Negative Sequence Components for Current, respectively.

4.3.3 Harmonics

The PMC-512-M provides harmonic analysis for THD, TOHD, TEHD and individual harmonics up to the 31st order. All harmonic parameters are available from the front panel or through communications.

The following equations illustrate how to calculate the individual harmonic distortion:

$$\text{Voltage } K^{th} \text{ Harmonic Distortion} = \frac{V_K}{V_1} \times 100\% \qquad \text{Current } K^{th} \text{ Harmonic Distortion} = \frac{I_k}{I_1} \times 100\%$$

Where

V_1 / I_1 are the Fundamental Voltage/Current RMS and

V_k / I_k is the k_{th} Harmonic Voltage/Current RMS

4.3.4 TDD

Total Demand Distortion (TDD) is defined as the ratio of the root mean square (rms) of the harmonic current to the root mean square value of the rated or maximum demand fundamental current.

TDD of the current is calculated by the formula below:

$$TDD = \frac{\sqrt{\sum_{h=1}^{h=\infty} (I_h)^2}}{I_L}$$

where

I_L = maximum demand of fundamental current

h = harmonic order (1, 2, 3, 4, etc.)

I_h = rms load current at the harmonic order h

4.3.5 K-Factor

K-Factor is defined as the weighted sum of the Harmonic Load Current according to their effects on transformer heating, as derived from ANSI/IEEE C57.110. A **K-Factor** of 1.0 indicates a linear load (no harmonics). The higher the **K-Factor**, the greater the harmonic heating effect.

$$K-Factor = \frac{\sum_{h=1}^{h=h_{max}} (I_h h)^2}{\sum_{h=1}^{h=h_{max}} (I_h)^2}$$

where

I_h = h_{th} Harmonic Current in RMS

h_{max} = Highest harmonic order

4.3.6 Crest Factor

Crest Factor is defined as the **Peak to Average Ratio (PAR)**, and its calculation is illustrated below:

$$C = \frac{|X|_{peak}}{X_{rms}}$$

where

$|X|_{peak}$ = Peak amplitude of the waveform

X_{rms} = RMS value

The following table illustrates the available Voltage and Current Harmonics measurements on the PMC-512-M.

	Phase A/AB	Phase B/BC	Phase C/CA
Harmonics-Voltage	THD	THD	THD
	TEHD	TEHD	TEHD
	TOHD	TOHD	TOHD
	2nd Harmonic	2nd Harmonic	2nd Harmonic
	…		
	31st Harmonic	31st Harmonic	31st Harmonic
Harmonics-Current (3-Φ SMs)	THD	THD	THD
	TEHD	TEHD	TEHD
	TOHD	TOHD	TOHD
	TDD	TDD	TDD
	2nd Harmonic	2nd Harmonic	2nd Harmonic
	…		
	31st Harmonic	31st Harmonic	31st Harmonic
	K-Factor	K-Factor	K-Factor
	Crest-Factor	Crest-Factor	Crest-Factor

Table 4-5 Harmonics Measurements

4.4 Alarm Setpoints

The PMC-512-M provides powerful alarming functions for all 3-Φ SMs as well as for different parameters. Each Alarm Type can be independently enabled, and a particular alarm within each Alarm Type may also be disabled individually by setting its **Alarm Threshold** to 0.

4.4.1 Current ON/OFF Status

The Current ON Threshold, Current ON Delay and Current OFF Delay are global parameters that are valid for all relevant alarms.

Parameters	Description	Range	Default
Current ON Threshold	The **ON Threshold** applies to all SMs for switching from the **OFF** to **ON** state.	0 to 100% (x0.1)	50 (5%)
Current ON Delay	The minimum duration that the Current of a particular SMs must exceed the **ON Threshold** before the Status would switch from OFF to ON.	0 to 9999(s)	10s
Current OFF Delay	The minimum duration that the Current of a particular SMs must fall below the **OFF Threshold** before the Status would switch from ON to OFF.	0 to 9999(s)	30s

Table 4-6 Global Parameters

The PMC-512-M provides the ON/OFF status for each SM to indicate whether the SM is **ON** (Loaded) or **OFF** (No Load). If the SM status is **OFF**, it means that the SM has no load and would prevent the Low alarms from activating.

The following figures illustrate the logic diagram of the Current ON/OFF status, respectively.

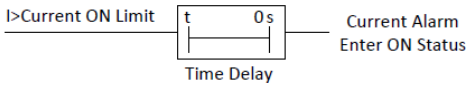

Current ON = True

Figure 4-2 Current ON Logic Diagram

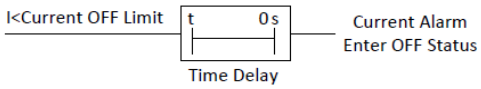

Current OFF = True

Figure 4-3 Current OFF Logic Diagram

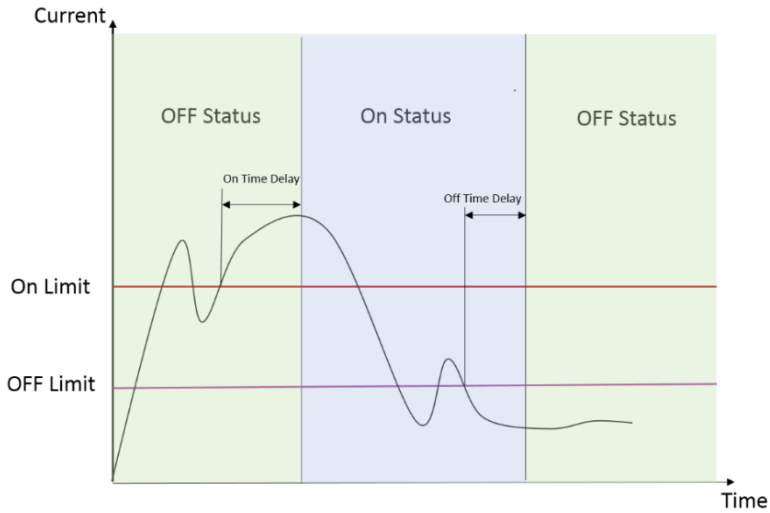

Figure 4-4 Current ON/OFF Status

4.4.2 Current Alarms

PMC-512-M provides the **Current On/OFF** status as well as two Current Alarm Levels (High and Low) for all 3-Φ SMs. The Current Alarms will only be evaluated if it's determined that the **Current ON** status is true.

*It should be noted that the **absolute value** of the Alarm Threshold is* calculated *based on the Breaker Rating parameters. **Therefore, it's critical to set the Breaker Rating correctly for each Current channel for the Current Alarms to work properly.***

| Channel Alarm Threshold | = Channel's Breaker Rating x Alarm Threshold (%)

The following table illustrates the Current Alarm parameters for each SM.

Parameters	Description	Range/Option	Default
Current Alarm Enable	Bit 0 = Ia, Bit 1 = Ib, Bit 2 = Ic	0 = Disabled	0

		1 = Enabled	
Current H Alarm Threshold (%)	Current H Alarm Limit	0 to 100%	0%
Current H Alarm Time Delay	Current H Alarm Time Delay	0 to 9999(s)	0s
Current L Alarm Threshold (%)	Current L Alarm Limit	0 to 100%	0%
Current L Alarm Time Delay	Current L Alarm Time Delay	0 to 9999(s)	0s
Current Alarm Trigger	Specifies what action would trigger when the Current Alarm becomes Active.	0 to 1 or 0 to 15[1]	0=None

Table 4-7 Current Alarm Parameters

Notes:

1) The bit values of B0 to B3 represent DO1 to DO4, respectively, with "1" meaning Enabled and "0" meaning Disabled (Open). 0 to 15 are valid only when the PMC-512-M is equipped with 4xDO option.

The logic diagram of the Current H Alarm is illustrated in Figure 4-5.

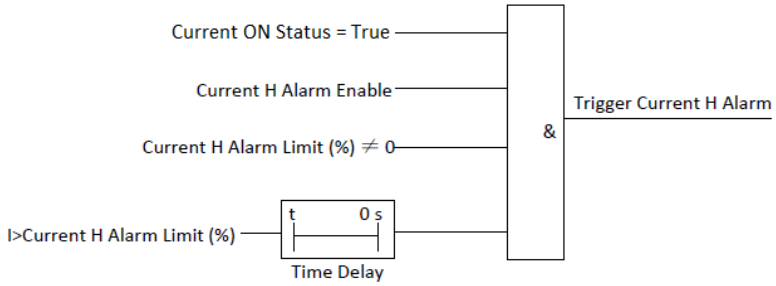

Figure 4-5 Current H Alarm Logic Diagram

The logic diagram of Current L Alarm is illustrated in Figure 4-6.

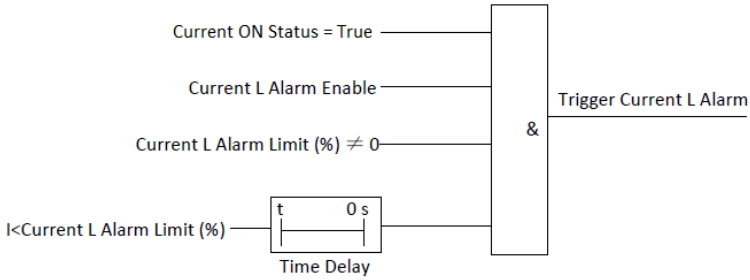

Figure 4-6 Current L Alarm Logic Diagram

4.4.3 Power Alarm

PMC-512-M provides Power Alarm Levels (High and Low) for all 3-Φ SMs. The following table illustrated the P/Q/S Alarm parameters.

Parameters	Description	Range/Option	Default
P Alarm Enable	Bit 0 = Pa, Bit 1 = Pb, Bit 2= Pc, Bit 4= P Tot, Bits 4 - 15=Reserved	0 = Disabled 1 = Enabled	0
P H Alarm Threshold	P H Alarm Limit	0 to 999999(W)	1000
P H Alarm Time Delay	P H Alarm Time Delay	0 to 9999(s)	10
P L Alarm Threshold	P L Alarm Limit	0 to 999999(W)	0
P L Alarm Time Delay	P L Alarm Time Delay	0 to 9999(s)	10
P Alarm Trigger	Specifies what action would trigger when the P Alarm becomes Active.	0 to 1 or 0 to 15[1]	0=None
Q Alarm Enable	Bit 0 = Qa, Bit 1 = Qb, Bit 2= Qc, Bit 4= Q Tot, Bits 4 - 15=Reserved	0 = Disabled 1 = Enabled	0
Q H Alarm Threshold	Q H Alarm Limit	0 to 999999(var)	1000
Q H Alarm Time Delay	Q H Alarm Time Delay	0 to 9999(s)	10
Q L Alarm Threshold	Q L Alarm Limit	0 to 999999(var)	0
Q L Alarm Time Delay	Q L Alarm Time Delay	0 to 9999(s)	10
Q Alarm Trigger	Specifies what action would trigger when the Q Alarm becomes Active.	0 to 1 or 0 to 15[1]	0=None
S Alarm Enable	Bit 0 = Sa, Bit 1 = Sb, Bit 2= Sc, Bit 4= S Tot, Bits 4 - 15=Reserved	0 = Disabled 1 = Enabled	0
S H Alarm Threshold	S H Alarm Limit	0 to 999999(VA)	1000
S H Alarm Time Delay	S H Alarm Time Delay	0 to 9999(s)	10
S L Alarm Threshold	S L Alarm Limit	0 to 999999(VA)	0

S L Alarm Time Delay	S L Alarm Time Delay	0 to 9999(s)	10
S Alarm Trigger	Specifies what action would trigger when the S Alarm becomes Active.	0 to 1 or 0 to 15[1]	0=None

Table 4-8 Power Alarm Parameters

Notes:

1) The bit values of B0 to B3 represent DO1 to DO4, respectively, with "1" meaning Enabled and "0" meaning Disabled (Open). 0 to 15 are valid only when the PMC-512-M is equipped with 4xDO option.

The logic diagram of Power H Alarm is illustrated in Figure 4-7.

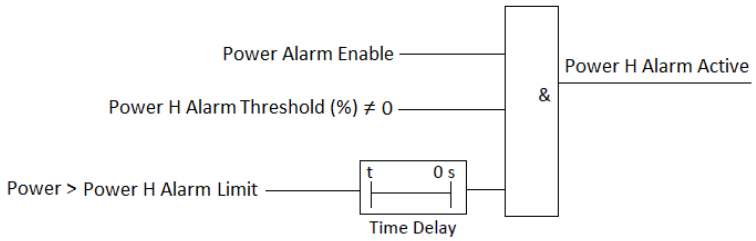

Figure 4-7 Power H Alarm Logic Diagram

The logic diagram of Power L Alarm is illustrated in Figure 4-8.

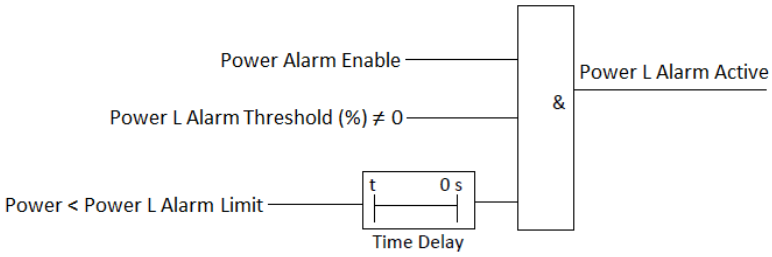

Figure 4-8 Power L Alarm Logic Diagram

4.4.4 Voltage Alarm

The following table illustrates the Voltage Alarm parameters.

Parameters	Description	Range/Option	Default
ULN Alarm Enable	Bit 0 = Ua, Bit 1 = Ub Bit 2= Uc, Bits 3 - 15=Reserved	0 = Disabled 1 = Enabled	0
ULN H Alarm Threshold	ULN H Alarm Limit	0 to 6000 (x0.1V)	0
ULN H Alarm Time Delay	ULN H Alarm Time Delay	0 to 9999(s)	0
ULN L Alarm Threshold	ULN L Alarm Limit	0 to 6000 (x0.1V)	0
ULN L Alarm Time Delay	ULN L Alarm Time Delay	0 to 9999(s)	0
ULN Alarm Trigger	Specifies what action would trigger when the ULN Alarm becomes Active.	0 to 1 or 0 to 15[1]	0=None
ULL Alarm Enable	Bit 0 = Uab, Bit 1 = Ubc Bit 2 = Uca, Bits 3 - 15=Reserved	0 = Disabled 1 = Enabled	0
ULL H Alarm Threshold	ULL H Alarm Limit	0 to 10000 (x0.1V)	0
ULL H Alarm Time Delay	ULL H Alarm Time Delay	0 to 9999(s)	0
ULL L Alarm Threshold	ULL L Alarm Limit	0 to 10000 (x0.1V)	0
ULL L Alarm Time Delay	ULL L Alarm Time Delay	0 to 9999(s)	0
ULL Alarm Trigger	Specifies what action would trigger when the ULL Alarm becomes Active.	0 to 1 or 0 to 15[1]	0=None

Table 4-9 Voltage Alarm Parameters

Notes:

1) The bit values of B0 to B3 represent DO1 to DO4, respectively, with "1" meaning Enabled and "0" meaning Disabled (Open). 0 to 15 are valid only when the PMC-512-M is equipped with 4xDO option.

The logic diagram of Voltage H Alarm is illustrated in Figure 4-9.

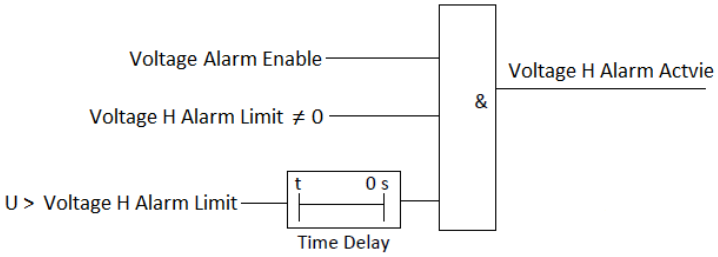

Figure 4-9 Voltage H Alarm Logic Diagram

The logic diagram of Voltage L Alarm is illustrated in Figure 4-10.

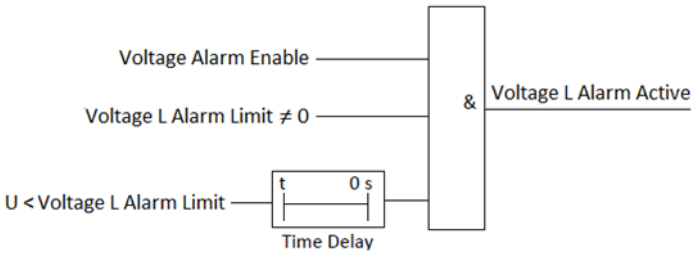

Figure 4-10 Voltage L Alarm Logic Diagram

4.4.5 Frequency Alarm

PMC-512-M provides two Frequency Alarm levels (High, Low). The following table illustrates the Frequency Alarm parameters.

Parameters	Description	Range/Option	Default
FREQ H Alarm Threshold	FREQ H Alarm Limit	45.00 to 65.00Hz	65.00Hz
FREQ H Alarm D Time Delay	FREQ H Alarm Time Delay	0 to 9999(s)	10s
FREQ L Alarm Threshold	FREQ L Alarm Limit	45.00 to 65.00Hz	45.00Hz
FREQ L Alarm Time Delay	FREQ L Alarm Time Delay	0 to 9999(s)	10s
FREQ Alarm Trigger	Specifies what action would trigger when the FREQ Alarm becomes Active.	0 to 1 or 0 to 15[1]	0=None

Table 4-10 Frequency Alarm Parameters

Notes:

1) The bit values of B0 to B3 represent DO1 to DO4, respectively, with "1" meaning Enabled and "0" meaning Disabled (Open). 0 to 15 are valid only when the PMC-512-M is equipped with 4xDO option.

The logic diagram of FREQ H Alarm is illustrated in Figure 4-11.

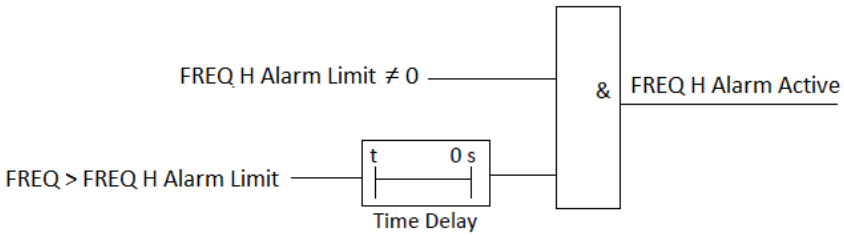

Figure 4-11 FREQ H Alarm Logic Diagram

The logic diagram of FREQ L Alarm is illustrated in Figure 4-12.

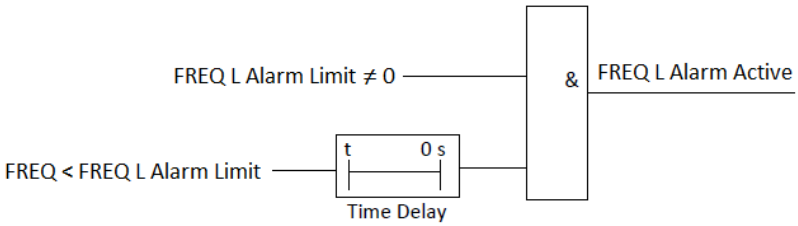

Figure 4-12 FREQ L Alarm Logic Diagram

4.4.6 Unbalance Alarm

The following table illustrates the Unbalance Alarm parameters.

Parameters	Description	Range/Option	Default
SMx I Unb. Alarm Enable	SMx I Unbalance Alarm Enable	0 = Disabled, 1= Enabled	0
SMx I Unb. Alarm Threshold (%)	SMx Current Unb. Alarm Limit	0 to 100%	10%
SMx I Unb. Alarm Time Delay	SMx Current Unb. Alarm Time Delay	0 to 9999(s)	10
SMx I Unb. Alarm Trigger	Specifies what action would trigger when the SMx I Unb. Alarm becomes Active.	0 to 1 or 0 to 15[1]	0=None
U Unb. Alarm Enable	U Unbalance Alarm Enable	0 = Disabled, 1 = Enabled	0
U Unb. Alarm Threshold (%)	Voltage Unb. Alarm Limit	0 to 100%	10%
U Unb. Alarm Time Delay	Voltage Unb. Alarm Time Delay	0 to 9999(s)	10
U Unb. Alarm Trigger	Specifies what action would trigger when the U Unb. Alarm becomes Active.	0 to 1 or 0 to 15[1]	0=None

Table 4-11 Unbalance Alarm Parameters

Notes:

1) The bit values of B0 to B3 represent DO1 to DO4, respectively, with "1" meaning Enabled and "0" meaning Disabled (Open). 0 to 15 are valid only when the PMC-512-M is equipped with 4xDO option.

The logic diagram of Unbalance Alarm is illustrated in Figure 4-13.

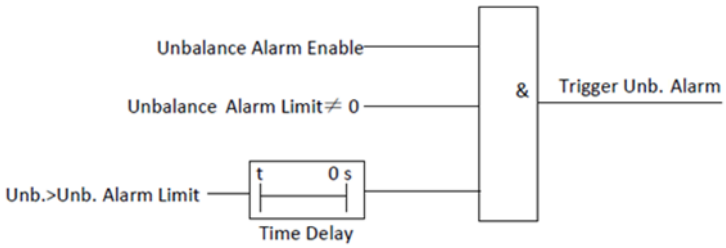

Figure 4-13 Unbalance Alarm Logic Diagram

4.4.7 Phase Reversal Alarm

The following table illustrates the Phase Reversal Alarm parameters.

Parameters	Range/Option	Default
Phase Reversal Alarm Enable	0 = Disabled, 1= Enabled	0
Phase Reversal Alarm Trigger	0 to 1 or 0 to 15[1]	0=None

Table 4-12 Phase Reversal Alarm Parameters

Notes:

1) The bit values of B0 to B3 represent DO1 to DO4, respectively, with "1" meaning Enabled and "0" meaning Disabled (Open). 0 to 15 are valid only when the PMC-512-M is equipped with 4xDO option.

Please be informed that the Phase Reversal Alarm assumes that the phase sequencing is based on **Positive** or **Clockwise** rotation (ABC).

4.4.8 Phase Loss Alarm

The PMC-512-M supports Phase Loss Alarm. The following table illustrates the Phase loss Alarm parameters.

Parameters	Range/Option	Default
Phase Loss Alarm Enable	0 = Disabled, 1= Enabled	0
Phase Loss Alarm Time Delay	0 to 9999(s)	10s
Phase Loss Alarm Trigger	0 to 1 or 0 to 15[1]	0=None

Table 4-13 Phase loss Sequence Alarm Parameters

Notes:

1) The bit values of B0 to B3 represent DO1 to DO4, respectively, with "1" meaning Enabled and "0" meaning Disabled (Open). 0 to 15 are valid only when the PMC-512-M is equipped with 4xDO option.

4.4.9 DI Alarm

The following table illustrates the DI Alarm parameters.

Parameters	Range/Option	Default
DIx Alarm Type	0=Disabled, 1=DIx Closed Trigger, 2=DIx Open Trigger	Disabled
DIx Alarm Time Delay	0 to 9999(s)	0
DIx Alarm Trigger	0 to 1 or 0 to 15[1]	0=None

x = 1 to 12

Table 4-14 DI Alarm Parameters

Notes:

1) The bit values of B0 to B3 represent DO1 to DO4, respectively, with "1" meaning Enabled and "0" meaning Disabled (Open). 0 to 15 are valid only when the PMC-512-M is equipped with 4xDO option.

The logic diagram of DI Closed Alarm is illustrated in Figure 4-14.

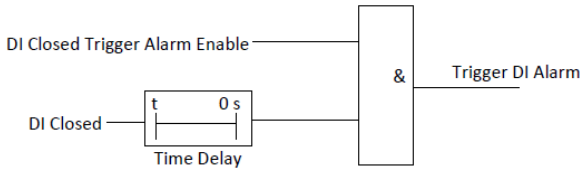

Figure 4-14 DI Closed Alarm Logic Diagram

The logic diagram of DI Open Alarm is illustrated in Figure 4-15.

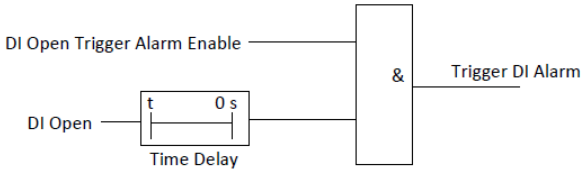

Figure 4-15 DI Open Alarm Logic Diagram

4.4.10 Temperature Alarm

The following table illustrates the Temperature Alarm parameters.

Parameters	Description	Range	Default
TCx Alarm Enable	Enable NTCx Temp. Alarm	0 = Disabled, 1= Enabled	0
TCx Alarm Limit (°C)	NTCx Temp. Alarm Limit	0 to 1000°C	0
TCx Alarm Time Delay (s)	NTCx Temp. Alarm Time Delay	0 to 9999 (s)	10
TCx Alarm Trigger	Specifies what action would trigger when the NTCx Alarm becomes Active.	0 to 1 or 0 to 15[1]	0=None

x = 1 to 4

Table 4-15 Temperature Alarm Parameters

Notes:

1) The bit values of B0 to B3 represent DO1 to DO4, respectively, with "1" meaning Enabled and "0" meaning Disabled (Open). 0 to 15 are valid only when the PMC-512-M is equipped with 4xDO option.

4.4.11 Residual Current Alarm

The following table illustrates the **Residual Current** Alarm parameters.

Parameters	Description	Range	Default
IRx Alarm Enable	Enable IRx. Alarm	0 = Disabled, 1= Enabled	0
IRx Alarm Limit	IRx Alarm Limit	0 to 60000 (x0.1mA)	0
IRx Alarm Time Delay (s)	IRx Alarm Time Delay	0 to 9999 (s)	10
IRx Alarm Trigger	0 to 1 or 0 to 15[1]	0 to 1 or 0 to 15[1]	0=None

x = 1 or 1 to 4

Table 4-16 Residual Current Alarm Parameters

Notes:

1) The bit values of B0 to B3 represent DO1 to DO4, respectively, with "1" meaning Enabled and "0" meaning Disabled (Open). 0 to 15 are valid only when the PMC-512-M is equipped with 4xDO option.

4.5 Data Logging

4.5.1 SOE Log

The PMC-512-M's **SOE Log** can store up to 128 events such as Power-On, Power-Off, Alarms, Relay actions, Digital Input status changes, Diagnostics and Setup changes in its non-volatile memory. Each event record includes the event classification, its relevant parameter values and a timestamp in ±1 ms resolution. All events can be retrieved from the Front Panel or through communications. If there are more than 128 events, the newest event will replace the oldest event on a First-In-First-Out basis. The SOE Log can be reset through the Front Panel or via communications.

4.5.2 Daily and Monthly Freeze Log

The PMC-512-M provides a **Daily Freeze Log** and a **Monthly Freeze Log** for 1-Φ SMs and 3-Φ SMs' energy measurements, including kWh Import/Export and kvarh Import/Export. Up to 62 daily freeze records and 31 monthly freeze records can be stored in the meter's non-volatile memory and will not suffer any loss in the event of power failure, and they are stored on a First-In-First-Out (FIFO) basis where the newest log will overwrite the oldest.

The **Daily Self-Read Time** setup parameter allows the user to specify the time of the day for the Daily Freeze Log Self-Read operation, while the **Monthly Self-Read Time** setup parameter allows the user to specify the time and day of the month for the Monthly Freeze Log Self-Read operation.

1) **Daily Freeze Self-Read Time** can be set to a zero value or a non-zero value:
   - A zero value means that the Self-Read will take place at 00:00 everyday.
   - A non-zero value means that the Self-Read will take place at a specific time of the day based on the formula: Self-Read time = (Hour x 100 + Min) where 0 ≤ Hour ≤ 23 and 0 ≤ Min ≤ 59. For example, the value 1512 means that the Self-Read will take place at 15:12 of each day.
2) **Monthly Freeze Self-Read Time** can be set to a zero value or a non-zero value:
   - A zero value means that the Self-Read will take place at 00:00 of the first day of each month.
   - A non-zero value means that the Self-Read will take place at a specific time and day based on the formula: Monthly Self-Read Time = Day x 100 + Hour where 0 ≤ Hour ≤ 23 and 1 ≤ Day ≤ 28. For example, the value 1512 means that the Self-Read will take place at 12:00pm on the 15th day of each month.

4.5.3 Data Recorder Log (DR Log)

The PMC-512-M provides five Data Recorders, each capable of recording a maximum 60 parameters. The DR Logs are stored in the meter's non-volatile memory and will not suffer any loss in the event of a power failure.

The programming of the DR is only supported over communications. The DR provides the following setup parameters:

Setup Parameters	Value/Option	Default
Trigger Mode	0=Disabled / 1=Enabled	0
Recording Mode	0=Stop-When-Full / 1=First-In-First-Out	1
Recording Depth	1 to 5000 (entry)	5000
Recording Interval	60 to 345,600 seconds	600 s
Recording Offset	0 to 43,200 seconds, 0 indicates no offset.	0
Number of Parameters	0 to 60	0
Parameter 1 to 60	See **Appendix B**	

Table 4-17 Setup Parameters for Data Recorder

Notes:

1) The DR Log is only operational when the values of **Trigger Mode**, **Recording Depth**, **Recording Interval**, and **Number of Parameters** are all non-zero.
2) The **Recording Offset** parameter can be used to delay the recording by a fixed time from the **Recording Interval**. For example, if the **Recording Interval** parameter is set to 3600 (hourly) and the **Recording Offset** parameter is set to 300 (5 minutes), the recording will take place at 5 minutes after the hour every hour, i.e. 00:05, 01:05, 02:05…etc. The value of the **Recording Offset** parameter must be less than the **Recording Interval** parameter.

4.6 Time of Use (TOU)

TOU is used for electricity pricing that varies depending on the time of day, day of week, and season. The TOU system allows the user to configure an electricity price schedule inside the PMC-512-M and accumulate energy consumption into different TOU tariffs based on the time of consumption. TOU programming is only supported through communications.

The PMC-512-M supports two TOU schedules, which can be switched at a pre-defined time. Each TOU schedule supports:

- Up to 12 seasons
- 20 Holidays or Alternate Days
- 12 Daily Profiles, each with 14 Periods in 15-minute interval
- 6 Tariffs

Each TOU schedule has the following setup parameters and can only be programmed via communications:

Setup Parameters	Definition	Options
Daily Profile #	Specify a daily rate schedule which can be divided into a maximum of 14 periods in 15-min intervals. Up to 12 Daily Profiles can be programmed for each TOU schedule.	1 to 12, the first period starts at any time of day and the last period ends at 24:00.
Season #	A year can be divided into a maximum of 12 seasons. Each season is specified with a Start Date and ends with the next season's Start Date.	1 to 12, starts from any day
Alternate Days #	A day can be defined as an Alternate Day, such as May 1st. Each Alternate Day is assigned a Daily Profile.	1 to 20.
Day Types	Specify the day type of the week. Each day of a week can be assigned a day type such as Weekday1, Weekday2, Weekday3 and Alternate Days. The Alternate Day has the highest priority.	Weekday1, Weekday2, Weekday3 and Alternate Days
Switching Time	Specify when to switch from one TOU schedule to another. Writing 0xFFFFFFFF to this parameter disables switching between TOU schedules.	Format: YYYYMMDDHH Default=0xFFFFFFFF

Table 4-18 TOU Setup Parameters

For each of the 6 Tariff Rates, the PMC-512-M provides the kWh Import/Export and kvarh Import/Export - Per Tariff for 3-Φ SMs. TOU data is available through the communications.

4.7 Diagnostics

The PMC-512-M provides wiring error detection for 3P4W and 3P3W wiring modes, which allow users to check for potential problems, especially during the initial commissioning stage. The following wiring errors may be detected:

- Frequency Out-of-Range
- Voltage/Current Phase Loss
- Incorrect Voltage and Current Phase Sequence
- P Direction per Phase and Total
- Possible Incorrect CT Polarity
- Broken NTC

Please note the error detections above are based on the assumptions below:

- The Voltage and Current Phase Sequence are consistent
- P is P Import, which means the P is over 0
- 3P4W wiring mode supports all detections
- 3P3W wiring mode does not support the detection of Voltage Phase Loss, P Direction per phase and CT Polarity

The Common Wiring Diagnostic register (0003) indicates the status of the device wiring error detection with a bit value of 1 meaning active and 0 meaning inactive which are illustrated in table below:

Bit	Event
B00	Summary Bit (Set if any other bit is set)
B01	Frequency is out of range (45 to 65Hz) (3P4W or 3P3W)

B02	Voltage Phase Loss (3P4W or 3P3W)
B03~B05	Reserved
B06	Voltage Phase Reversal (3P4W or 3P3W)
B07~B15	Reserved

Table 4-19 Common Wiring Diagnostic Register

The SMs Diagnostic registers (0004 to 0011) indicate the status of the SMs wiring error detection with a bit value of 1 meaning active and 0 meaning inactive which are illustrated in table below:

Bit	Event
B00	Summary Bit (Set if any other bit is set)
B01	Reserved
B02	Reserved
B03	Current Phase Loss (3P4W or 3P3W)
B04	Reserved
B05	Reserved
B06	Reserved
B07	Current Phase Reversal (3P4W or 3P3W)
B08	Negative P Total may be abnormal (3P4W or 3P3W)
B09	Negative Pa may be abnormal (3P4W only)
B10	Negative Pb may be abnormal (3P4W only)
B11	Negative Pc may be abnormal (3P4W only)
B12~B15	Reserved

Table 4-20 3-Φ SMs Wiring Diagnostic Register

4.7.1 Voltage Phase Loss

The Voltage Phase Loss diagnostic is based on the following logic diagram (During Voltage Phase Loss, the Voltage Phase Reversal detection is invalid).

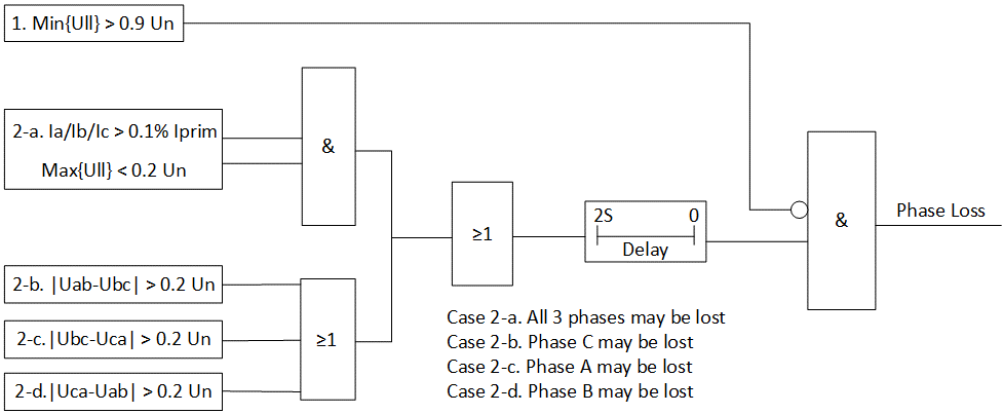

Figure 4-16 Voltage Phase Loss Logic

where Un and Iprim represent the Voltage and Current nominal in Primary values. For the Voltage and Current Phase Loss detection to work correctly, the PT Primary and CT Primary should be configured to represent the respective nominal values.

4.7.2 Current Phase Loss

The following requirements should be met simultaneously for the **Current Phase Loss** status to be valid. During **Current Phase Loss**, the **Current Phase Reversal** detection is invalid.

1. Any one or two phases Current = 0.
2. At least one phase Current ≥ 0.1%Iprim

Chapter 5 Modbus Register Map

This chapter provides a complete description of the Modbus register map (**Protocol Versions 1.1**) for the PMC-512-M to facilitate the development of 3rd party communications driver for accessing information on the PMC-512-M. For a complete Modbus Protocol Specification, please visit www.modbus.org.

The PMC-512-M supports the following Modbus functions:

1) Read Holding Registers (Function Code 0x03)
2) Force Single Coil (Function Code 0x05)
3) Preset Multiple Registers (Function Code 0x10)
4) Read Energy Files (Function Code 0x14)

The following table provides a description of the different data formats used for the Modbus registers. The PMC-512-M uses the Big Endian byte ordering system.

Format	Description
UINT16/INT16	Unsigned/Signed 16-bit Integer
UINT32/INT32	Unsigned/Signed 32-bit Integer
Float	IEEE 754 32-bit Single Precision Floating Point Number

5.1 General Status

Register	Property	Description	Format	Note
0000	RO	DI Status[1]	UINT16	
0001	RO	DO Status[2]	UINT16	
0002	RO	Device Diagnostics[3]	UINT16	
0003	RO	Common Wiring Diagnostic Status[4]	UINT16	
0004	RO	3-Φ SM1 Wiring Diagnostic Status[5]	UINT16	
0005	RO	3-Φ SM2 Wiring Diagnostic Status[5]	UINT16	
0006	RO	3-Φ SM3 Wiring Diagnostic Status[5]	UINT16	
0007	RO	3-Φ SM4 Wiring Diagnostic Status[5]	UINT16	
0008	RO	3-Φ SM5 Wiring Diagnostic Status[5]	UINT16	
0009	RO	3-Φ SM6 Wiring Diagnostic Status[5]	UINT16	
0010	RO	3-Φ SM7 Wiring Diagnostic Status[5]	UINT16	
0011	RO	3-Φ SM8 Wiring Diagnostic Status[5]	UINT16	
0012	RO	SOE Log Pointer[6]	UINT32	
0014	RO	Daily Freeze Log Pointer	UINT32	
0016	RO	Monthly Freeze Log Pointer	UINT32	
0018	RO	DR1 Log Pointer	UINT32	
0020	RO	DR2 Log Pointer	UINT32	
0022	RO	DR3 Log Pointer	UINT32	
0024	RO	DR4 Log Pointer	UINT32	
0026	RO	DR5 Log Pointer	UINT32	
0028~0037		Reserved		
0039	RO	Global Alarm Status	UINT16	0=Normal, 1= Abnormal
0040	RO	Voltage Alarm Status[7]	UINT32	
0042	RO	Current H Alarm Status[8]	UINT32	
0044	RO	Current L Alarm Status[8]	UINT32	
0046	RO	P H Alarm Status[9]	UINT32	
0048	RO	P L Alarm Status[9]	UINT32	
0050	RO	Q H Alarm Status[9]	UINT32	
0052	RO	Q L Alarm Status[9]	UINT32	
0054	RO	S H Alarm Status[9]	UINT32	
0056	RO	S L Alarm Status[9]	UINT32	
0058	RO	I Unbalance Alarm Status[10]	UINT16	
0059	RO	I Phase Reversal Alarm Status[10]	UINT16	
0060	RO	DI Alarm Status[11]	UINT16	
0061	RO	Common Data Alarm Status[12]	UINT16	
0062	RO	Ethernet Status[13]	UINT16	

Figure 5-2 General Status

Notes:

1) For the **DI Status** register, the bit values of Bit 0 to Bit 11 represent the states of IN1 to IN12, respectively, with "1" meaning Active (Closed) and "0" meaning Inactive (Open). The remaining bits are reserved. This register is valid only when the device is equipped with 12xDI option.

2) For the **DO Status** register, the bit value of Bit 0 to Bit 3 represents the state of the DO1 to DO4, with "1" meaning Active (Closed) and "0" meaning Inactive (Open). The remaining bits are reserved. Bit 1 to Bit 3 is valid only when the device is equipped with 4xDO option.
3) The **Device Diagnostics** register indicates the various system statuses with a bit value of 0 meaning Normal and 1 meaning Abnormal. The following table illustrates the details of the Diagnostics register.

Bit	Event
Bit 0	NVRAM Fault
Bit 1	Disk Fault
Bit 2	A/D Chips Fault
Bit 3	Internal Power Supply Fault
Bit 4	System Parameters Error
Bit 5	Internal Parameters Error
Bit 6~31	Reserved

Figure 5-3 Device Diagnostics Register (Reg. # 0002)

4) The following table illustrates the details of the **Common Wiring Diagnostic Status** register, with a bit value of 0 meaning Normal and 1 meaning Abnormal:

Bit	Event
Bit 0	Summary Bit (Set if any other bit is set)
Bit 1	Frequency is out of range (45 to 65Hz) (3P4W or 3P3W)
Bit 2	Voltage Phase Loss (3P4W or 3P3W)
Bit 3~5	Reserved
Bit 6	Voltage Phase Reversal (3P4W or 3P3W)
Bit 7~15	Reserved

Figure 5-4 Common Wiring Diagnostic Status Register (Reg. # 0003)

5) The following table illustrates the details of the **3-Φ SMx Wiring Diagnostic Status** register, with a bit value of 0 meaning Normal and 1 meaning Abnormal:

Bit	Event
Bit 0	Summary Bit (Set if any other bit is set)
Bit 1~2	Reserved
Bit 3	Current Phase Loss (3P4W or 3P3W)
Bit 4~6	Reserved
Bit 7	Current Phase Reversal (3P4W or 3P3W)
Bit 8	Negative P Total may be abnormal (3P4W or 3P3W)
Bit 9	Negative Pa may be abnormal (3P4W only)
Bit 10	Negative Pb may be abnormal (3P4W only)
Bit 11	Negative Pc may be abnormal (3P4W only)
Bit 12~15	Reserved

Figure 5-5 3-Φ SM 1-8 Wiring Diagnostic Status Register

6) The PMC-512-M has one SOE Log and five Data Recorder Logs. Each of these logs has a Log Pointer that indicates its current logging position. The range of the Log Pointer is between 0 and 0xFFFFFFFFH, and it is incremented by one for every new log generated and will roll over to 0 if its current value is 0xFFFFFFFF. If a Clear Log is performed through the Front Panel or via communications, its Log Pointer will be reset to zero, and the SOE Log Pointer will be immediately incremented by one with a new "Clear SOE" event. When the number of events is larger than the Log Depth, the latest 128 SOE logs are stored on a FIFO basis.
7) For the **Voltage Alarm Status** register, the bit values of B0 to B16 represent different alarms, with "1" meaning Active (Closed) and "0" meaning Inactive (Open).

	Bit 16	**Bit 15**	**Bit 14**	**Bit 13**	**Bit 12**
	Voltage Loss	Voltage Phase Reversal	Voltage Unbal.	Frequency L	Frequency H
Bit 11	**Bit 10**	**Bit 9**	**Bit 8**	**Bit 7**	**Bit 6**
Uca L	Ubc L	Uab L	Uc L	Ub L	Ua L
Bit 5	**Bit 4**	**Bit 3**	**Bit 2**	**Bit 1**	**Bit 0**
Uca H	Ubc H	Uab H	Uc H	Ub H	Ua H

Figure 5-6 Voltage Alarm Status Register

8) For the **Current Alarm Status** register, the bit values of B0 to B23 represent different alarms, with "1" meaning Active (Closed) and "0" meaning Inactive (Open).

Bit	**Bit 23~31**		
Status	Reserved		
Bit	**Bit 23**	**Bit 22**	**Bit 21**
Status	3-Φ SM8 Phase C	3-Φ SM8 Phase B	3-Φ SM8 Phase A
Bit	**Bit 20**	**Bit 19**	**Bit 18**

Status	3-Φ SM7 Phase C	3-Φ SM7 Phase B	3-Φ SM7 Phase A
Bit	**Bit 17**	**Bit 16**	**Bit 15**
Status	3-Φ SM6 Phase C	3-Φ SM6 Phase B	3-Φ SM6 Phase A
Bit	**Bit 14**	**Bit 13**	**Bit 12**
Status	3-Φ SM5 Phase C	3-Φ SM5 Phase B	3-Φ SM5 Phase A
Bit	**Bit 11**	**Bit 10**	**Bit 9**
Status	3-Φ SM4 Phase C	3-Φ SM4 Phase B	3-Φ SM4 Phase A
Bit	**Bit 8**	**Bit 7**	**Bit 6**
Status	3-Φ SM3 Phase C	3-Φ SM3 Phase B	3-Φ SM3 Phase A
Bit	**Bit 5**	**Bit 4**	**Bit 3**
Status	3-Φ SM2 Phase C	3-Φ SM2 Phase B	3-Φ SM2 Phase A
Bit	**Bit 2**	**Bit 1**	**Bit 0**
Status	3-Φ SM1 Phase C	3-Φ SM1 Phase B	3-Φ SM1 Phase A

Figure 5-7 Current Alarm Status Register

9) For **P/Q/S H/L Alarm Status** register, the bit values of B0 to B15 represent different alarms, with "1" meaning Active (Closed) and "0" meaning Inactive (Open).

Bit	**Bit 31**	**Bit 30**	**Bit 29**	**Bit 28**
Status	3-Φ SM8 Total	3-Φ SM8 Phase C	3-Φ SM8 Phase B	3-Φ SM8 Phase A
Bit	**Bit 27**	**Bit 26**	**Bit 25**	**Bit 24**
Status	3-Φ SM7 Total	3-Φ SM7 Phase C	3-Φ SM7 Phase B	3-Φ SM7 Phase A
Bit	**Bit 23**	**Bit 22**	**Bit 21**	**Bit 20**
Status	3-Φ SM6 Total	3-Φ SM6 Phase C	3-Φ SM6 Phase B	3-Φ SM6 Phase A
Bit	**Bit 19**	**Bit 18**	**Bit 17**	**Bit 16**
Status	3-Φ SM5 Total	3-Φ SM5 Phase C	3-Φ SM5 Phase B	3-Φ SM5 Phase A
Bit	**Bit 15**	**Bit 14**	**Bit 13**	**Bit 12**
Status	3-Φ SM4 Total	3-Φ SM4 Phase C	3-Φ SM4 Phase B	3-Φ SM4 Phase A
Bit	**Bit 11**	**Bit 10**	**Bit 9**	**Bit 8**
Status	3-Φ SM3 Total	3-Φ SM3 Phase C	3-Φ SM3 Phase B	3-Φ SM3 Phase A
Bit	**Bit 7**	**Bit 6**	**Bit 5**	**Bit 4**
Status	3-Φ SM2 Total	3-Φ SM2 Phase C	3-Φ SM2 Phase B	3-Φ SM2 Phase A
Bit	**Bit 3**	**Bit 2**	**Bit 1**	**Bit 0**
Status	3-Φ SM1 Total	3-Φ SM1 Phase C	3-Φ SM1 Phase B	3-Φ SM1 Phase A

Table 5-8 P/Q/S H/L Alarm Status

10) For the **I Unbalance Alarm Status** and **I Phase Reversal Alarm Status** registers, the bit values of B0 to B07 represent different SMs alarms, with "1" meaning Active (Closed) and "0" meaning Inactive (Open).

Bit	**Bit 8~15**			
Status	Reserved			
Bit	**Bit 7**	**Bit 6**	**Bit 5**	**Bit 4**
Status	3-Φ SM6	3-Φ SM7	3-Φ SM6	3-Φ SM5
Bit	**Bit 3**	**Bit 2**	**Bit 1**	**Bit 0**
Status	3-Φ SM4	3-Φ SM3	3-Φ SM2	3-Φ SM1

Table 5-9 I Unbalance Alarm Status and I Phase Reversal Alarm Status

11) For the **DI Alarm Status** register, the bit values of B0 to B11 represent DI1 to DI12 alarms, with "1" meaning Active (Closed) and "0" meaning Inactive (Open).

Bit	**Bit 12~15**			
Status	Reserved			
Bit	**Bit 11**	**Bit 10**	**Bit 9**	**Bit 8**
Status	DI 12	DI 11	DI 10	DI 9
Bit	**Bit 7**	**Bit 6**	**Bit 5**	**Bit 4**
Status	DI 8	DI 7	DI 6	DI 5
Bit	**Bit 3**	**Bit 2**	**Bit 1**	**Bit 0**
Status	DI 4	DI 3	DI 2	DI 1

Table 5-10 DI Alarm Status

12) For the **Common Data Alarm Status** register, the bit values of B0 to B07 represent different alarms, with "1" meaning Active (Closed) and "0" meaning Inactive (Open).

Bit	**Bit 8~15**			
Status	Reserved			
Bit	**Bit 7**	**Bit 6**	**Bit 5**	**Bit 4**
Status	IR4	IR3	IR2	TC4
Bit	**Bit 3**	**Bit 2**	**Bit 1**	**Bit 0**
Status	TC3	TC2	TC1	IR1

Table 5-11 Common Data Alarm Status

13) The table below illustrates the **Ethernet Status** register.

Bit 8~15: Error Code	**Bit 0~7: Offline Status**
0=Initialization 1=Wiring Connected 2=DNS Resolution 3=Port Opened 7=TCP Connection in Progress 8=Response Timeout 9=TCP Connection Closed	0=Offline 1=Online

Table 5-12 Ethernet Status Register

5.2 Basic Measurements

5.2.1 Measurements

Register	Property	Description	Format	Scale	Unit
0100	RO	U1	FP32	x1	V
0102	RO	U2	FP32		
0104	RO	U3	FP32		
0106	RO	ULN Average	FP32		
0108	RO	U12	FP32		
0110	RO	U23	FP32		
0112	RO	U31	FP32		
0114	RO	ULL Average	FP32		
0116	RO	Frequency	FP32		Hz
0118	RO	U1/U12 Angle	FP32		°
0120	RO	U2/U23 Angle	FP32		
0122	RO	U3/U31 Angle	FP32		
0124	RO	Voltage Unbalance	FP32		
0126	RO	IR1~	FLOAT		mA
0128	RO	TC1~	FP32		℃
0130	RO	TC2~	FP32		
0132	RO	TC3~	FP32		
0134	RO	TC4~	FP32		
0136	RO	NTC1 Resistance~	UINT16	x100	-
0137	RO	NTC2 Resistance~	UINT16		
0138	RO	NTC3 Resistance~	UINT16		
0139	RO	NTC4 Resistance~	UINT16		
0140	RO	IR2~	FLOAT	x1	mA
0142	RO	IR3~	FLOAT		
0144	RO	IR4~	FLOAT		

~Available when the device is equipped with corresponding options.

Table 5-13 Real-time Measurements

5.2.2 3-Φ SMs Measurements

Register	Property	Description	Format	Scale	Unit
0200	RO	SM1 I1	FP32	x1	A
0202	RO	SM1 I2	FP32		
0204	RO	SM1 I3	FP32		
0206	RO	SM1 I avg	FP32		
0208	RO	SM1 Pa	FP32		W
0210	RO	SM1 Pb	FP32		
0212	RO	SM1 Pc	FP32		
0214	RO	SM1 P total	FP32		
0216	RO	SM1 Qa	FP32		var
0218	RO	SM1 Qb	FP32		

0220	RO	SM1 Qc	FP32		
0222	RO	SM1 Q total	FP32		
0224	RO	SM1 Sa	FP32		VA
0226	RO	SM1 Sb	FP32		
0228	RO	SM1 Sc	FP32		
0230	RO	SM1 S total	FP32		
0232	RO	SM1 PFa	FP32		
0234	RO	SM1 PFb	FP32		
0236	RO	SM1 PFc	FP32		
0238	RO	SM1 PF total	FP32		
0240	RO	SM1 I1 Angle	FP32		°
0242	RO	SM1 I2 Angle	FP32		
0244	RO	SM1 I3 Angle	FP32		
0246	RO	SM1 Current Unbalance	FP32		%
0248	RO	SM1 Inc	FP32		A
0250~0299	RO	SM2 Measurements	Please refer to SM1 Measurements	Please refer to SM1 Measurements	
0300~0349	RO	SM3 Measurements			
0350~0399	RO	SM4 Measurements			
0400~0449	RO	SM5 Measurements~			
0450~0499	RO	SM6 Measurements~			
0500~0549	RO	SM7 Measurements~			
0550~0599	RO	SM8 Measurements~			

~Available when the device is equipped with corresponding option.

Table 5-14 3-Φ SMs Measurements

5.2.3 1-Φ SMs Measurements

Register	Property	Description	Format	Scale	Unit
0600	RO	SM1 Current	FP32	x1	A
0602	RO	SM1 P	FP32		W
0604	RO	SM1 Q	FP32		var
0606	RO	SM1 S	FP32		VA
0608	RO	SM1 PF	FP32		
0610	RO	SM1 Current Angle			°
0612~0623	RO	SM2 Measurements	Please refer to SM1 Measurements		
0624~0635	RO	SM3 Measurements			
0636~0647	RO	SM4 Measurements			
0648~0659	RO	SM5 Measurements			
0660~0671	RO	SM6 Measurements			
0672~0683	RO	SM7 Measurements			
0684~0695	RO	SM8 Measurements			
0696~0707	RO	SM9 Measurements			
0708~0719	RO	SM10 Measurements			
0720~0731	RO	SM11 Measurements			
0732~0743	RO	SM12 Measurements			
0744~0755	RO	SM13 Measurements~			
0756~0767	RO	SM14 Measurements~			
0768~0779	RO	SM15 Measurements~			
0780~0791	RO	SM16 Measurements~			
0792~0803	RO	SM17 Measurements~			
0804~0815	RO	SM18 Measurements~			
0816~0827	RO	SM19 Measurements~			
0828~0839	RO	SM20 Measurements~			
0840~0851	RO	SM21 Measurements~			
0852~0863	RO	SM22 Measurements~			
0864~0875	RO	SM23 Measurements~			
0876~0887	RO	SM24 Measurements~			

~Available when the device is equipped with corresponding option.

Table 5-15 1-Φ SMs Measurements

5.3 Energy Measurements

5.3.1 3-Φ SMs Energy Measurements

Register	Description	Format
0900~0969	SM1 Energy	See Table 5-17
0970~1039	SM2 Energy	
1040~1109	SM3 Energy	
1110~1179	SM4 Energy	
1180~1249	SM5 Energy~	
1250~1319	SM6 Energy~	
1320~1389	SM7 Energy~	
1390~1459	SM8 Energy~	

~Available when the device is equipped with corresponding option.

Table 5-16 3-Φ SMs Energy Measurements

Offset	Property	Description	Format	Scale	Unit
+0	RW	kWh Import	INT32	x0.1	kWh
+2	RW	kWh Export	INT32		kWh
+4	RO	kWh Net	INT32		kWh
+6	RO	kWh Total	INT32		kWh
+8	RW	kvarh Import	INT32		kvarh
+10	RW	kvarh Export	INT32		kvarh
+12	RO	kvarh Net	INT32		kvarh
+14	RO	kvarh Total	INT32		kvarh
+16	RW	Phase A kWh Import	INT32		kWh
+18	RW	Phase A kWh Export	INT32		kWh
+20	RO	Phase A kWh Net	INT32		kWh
+22	RO	Phase A kWh Total	INT32		kWh
+24	RW	Phase A kvarh Import	INT32		kvarh
+26	RW	Phase A kvarh Export	INT32		kvarh
+28	RO	Phase A kvarh Net	INT32		kvarh
+30	RO	Phase A kvarh Total	INT32		kvarh
+32	RW	Phase B kWh Import	INT32		kWh
+34	RW	Phase B kWh Export	INT32		kWh
+36	RO	Phase B kWh Net	INT32		kWh
+38	RO	Phase B kWh Total	INT32		kWh
+40	RW	Phase B kvarh Import	INT32		kvarh
+42	RW	Phase B kvarh Export	INT32		kvarh
+44	RO	Phase B kvarh Net	INT32		kvarh
+46	RO	Phase B kvarh Total	INT32		kvarh
+48	RW	Phase C kWh Import	INT32		kWh
+50	RW	Phase C kWh Export	INT32		kWh
+52	RO	Phase C kWh Net	INT32		kWh
+54	RO	Phase C kWh Total	INT32		kWh
+56	RW	Phase C kvarh Import	INT32		kvarh
+58	RW	Phase C kvarh Export	INT32		kvarh
+60	RO	Phase C kvarh Net	INT32		kvarh
+62	RO	Phase C kvarh Total	INT32		kvarh

Table 5-17 3-Φ SMs Measurements

5.3.2 1-Φ SMs Energy Measurements

Register	Description	Format
1500~1515	SM1 Energy	See Table 5-19
1516~1531	SM2 Energy	
1532~1547	SM3 Energy	
1548~1563	SM4 Energy	
1564~1579	SM5 Energy	
1580~1595	SM6 Energy	
1596~1611	SM7 Energy	
1612~1627	SM8 Energy	
1628~1643	SM9 Energy	
1644~1659	SM10 Energy	
1660~1675	SM11 Energy	
1676~1691	SM12 Energy	

1692~1707	SM13 Energy~	
1708~1723	SM14 Energy~	
1724~1739	SM15 Energy~	
1740~1755	SM16 Energy~	
1756~1771	SM17 Energy~	
1772~1787	SM18 Energy~	
1788~1803	SM19 Energy~	
1804~1819	SM20 Energy~	
1820~1835	SM21 Energy~	
1836~1851	SM22 Energy~	
1852~1867	SM23 Energy~	
1868~1883	SM24 Energy~	

~Available when the device is equipped with corresponding option.

Table 5-18 1-Φ SMs Energy Measurements

Offset	Property	Description	Format	Scale	Unit
+0	RW	kWh Import	INT32	x0.1	kWh
+2	RW	kWh Export	INT32		kWh
+4	RW	kWh Net	INT32		kvarh
+6	RW	kWh Total	INT32		kvarh
+8	RW	kvarh Import	INT32		kWh
+10	RW	kvarh Export	INT32		kWh
+12	RW	kvarh Net	INT32		kvarh
+14	RW	kvarh Total	INT32		kvarh

Table 5-19 1-Φ SMs Measurements

5.3.3 TOU Energy Measurements

Register	Property	Description	Format	Note
1900~2155	RW	Energy Measurement of T1	See Table 5-21	
2156~2411	RW	Energy Measurement of T2		
2412~2667	RW	Energy Measurement of T3		
2668~2923	RW	Energy Measurement of T4		
2924~3179	RW	Energy Measurement of T5		
3180~3435	RW	Energy Measurement of T6		

Table 5-20 TOU Energy Measurements

Offset	Property	Description	Format
0~31	RW	3-Φ SM1 Energy Measurements	See Table 5-22
32~63	RW	3-Φ SM2 Energy Measurements	
64~95	RW	3-Φ SM3 Energy Measurements	
96~127	RW	3-Φ SM4 Energy Measurements	
128~159	RW	3-Φ SM5 Energy Measurements~	
160~191	RW	3-Φ SM6 Energy Measurements~	
192~223	RW	3-Φ SM7 Energy Measurements~	
224~255	RW	3-Φ SM8 Energy Measurements~	

~Available when the device is equipped with corresponding option.

Table 5-21 Energy Measurements Per Tariff

Offset	Property	Description	Format	Scale	Unit
0	RW	kWh Import	INT32	x0.1	kWh
2	RW	kWh Export	INT32		kWh
4	RW	kvarh Import	INT32		kvarh
6	RW	kvarh Export	INT32		kvarh
8	RW	Phase A kWh Import	INT32		kWh
10	RW	Phase A kWh Export	INT32		kWh
12	RW	Phase A kvarh Import	INT32		kvarh
14	RW	Phase A kvarh Export	INT32		kvarh
16	RW	Phase B kWh Import	INT32		kWh
18	RW	Phase B kWh Export	INT32		kWh
20	RW	Phase B kvarh Import	INT32		kvarh
22	RW	Phase B kvarh Export	INT32		kvarh
24	RW	Phase C kWh Import	INT32		kWh
26	RW	Phase C kWh Export	INT32		kWh
28	RW	Phase C kvarh Import	INT32		kvarh
30	RW	Phase C kvarh Export	INT32		kvarh

Table 5-22 Energy Measurements Per SM

5.4 Demands

5.4.1 Present Demands

Register	Property	Description	Format
5300~5329	RO	3-Φ SM1 Present Demand	See Table 5-24
5330~5359	RO	3-Φ SM2 Present Demand	
5360~5389	RO	3-Φ SM3 Present Demand	
5390~5419	RO	3-Φ SM4 Present Demand	
5420~5449	RO	3-Φ SM5 Present Demand~	
5450~5479	RO	3-Φ SM6 Present Demand~	
5480~5509	RO	3-Φ SM7 Present Demand~	
5510~5539	RO	3-Φ SM8 Present Demand~	

~Available when the device is equipped with corresponding option.

Table 5-23 Present Demand Measurements

Offset	Property	Description	Format	Scale/Unit
+0	RO	P Total	FLOAT	W
+2	RO	Q Total	FLOAT	var
+4	RO	S Total	FLOAT	VA
+6	RO	Ia	FLOAT	A
+8	RO	Pa	FLOAT	W
+10	RO	Qa	FLOAT	var
+12	RO	Sa	FLOAT	VA
+14	RO	Ib	FLOAT	A
+16	RO	Pb	FLOAT	W
+18	RO	Qb	FLOAT	var
+20	RO	Sb	FLOAT	VA
+22	RO	Ic	FLOAT	A
+24	RO	Pc	FLOAT	W
+26	RO	Qc	FLOAT	var
+28	RO	Sc	FLOAT	VA

Table 5-24 3-Φ SMs THD Data Structure

5.4.2 Max. Demand Log

Register	Property	Description	Format
23000~23065	RO	3-Φ SM1 Max. Demand Log of This Month (Since Last Reset)	See Table 5-26
23066~23131	RO	3-Φ SM2 Max. Demand Log of This Month (Since Last Reset)	
23132~23197	RO	3-Φ SM3 Max. Demand Log of This Month (Since Last Reset)	
23198~23263	RO	3-Φ SM4 Max. Demand Log of This Month (Since Last Reset)	
23264~23329	RO	3-Φ SM5 Max. Demand Log of This Month (Since Last Reset) ~	
23330~23395	RO	3-Φ SM6 Max. Demand Log of This Month (Since Last Reset) ~	
23396~23461	RO	3-Φ SM7 Max. Demand Log of This Month (Since Last Reset) ~	
23462~23527	RO	3-Φ SM8 Max. Demand Log of This Month (Since Last Reset) ~	
23600~23665	RO	3-Φ SM1 Max. Demand Log of Last Month (Before Last Reset)	
23666~23731	RO	3-Φ SM2 Max. Demand Log of Last Month (Before Last Reset)	
23732~13797	RO	3-Φ SM3 Max. Demand Log of Last Month (Before Last Reset)	
23798~23863	RO	3-Φ SM4 Max. Demand Log of Last Month (Before Last Reset)	
23864~23929	RO	3-Φ SM5 Max. Demand Log of Last Month (Before Last Reset) ~	
23930~23995	RO	3-Φ SM6 Max. Demand Log of Last Month (Before Last Reset) ~	
23996~24061	RO	3-Φ SM7 Max. Demand Log of Last Month (Before Last Reset) ~	
24062~24127	RO	3-Φ SM8 Max. Demand Log of Last Month (Before Last Reset) ~	

~Available when the device is equipped with corresponding option.

Table 5-25 Max. Demand Log of This Month (Since Last Reset)

Offset	Property	Description	Format	Scale/Unit
+00~+05	RO	P Total	See Table 5-27	W
+06~+11	RO	Q Total		var
+12~+17	RO	Ia		A
+18~+23	RO	Pa		W
+24~+29	RO	Qa		var
+30~+35	RO	Ib		A
+36~+41	RO	Pb		W
+42~+47	RO	Qb		var
+48~+53	RO	Ic		A
+54~+59	RO	Pc		W

+60~+65	RO	Qc		var

Table 5-26 Max. Demand Log Per SM

Offset		Description	Format	Range
+0	High	Year - 2000	UINT16	0 to 99
	Low	Month		1 to 12
+1	High	Day	UINT16	1 to 31
	Low	Hour		0 to 23
+2	High	Minute	UINT16	0 to 59
	Low	Second		0 to 59
+3	-	Millisecond	UINT16	0 to 999
+4~+5	-	Max. Demand Value	Float	

Table 5-27 Demand Data Structure

5.5 Harmonic Measurements

Register	Property	Description	Format	Scale	Unit
25000	RO	UA THD	FP32	x1	-
25002	RO	UB THD	FP32		
25004	RO	UC THD	FP32		
25006	RO	UA TOHD	FP32		
25008	RO	UB TOHD	FP32		
25010	RO	UC TOHD	FP32		
25012	RO	UA TEHD	FP32		
25014	RO	UB TEHD	FP32		
25016	RO	UC TEHD	FP32		
25018~25035	RO	3-Φ SM1 THD	See Note 1)		
25036~25053	RO	3-Φ SM2 THD			
25054~25071	RO	3-Φ SM3 THD			
25072~25089	RO	3-Φ SM4 THD			
25090~25107	RO	3-Φ SM5 THD~			
25108~25125	RO	3-Φ SM6 THD~			
25126~25143	RO	3-Φ SM7 THD~			
25144~25161	RO	3-Φ SM8 THD~			
25200~25259	RO	UA Individual Harmonic	See Note 2)		
25260~25319	RO	UB Individual Harmonic			
25320~25379	RO	UC Individual Harmonic			
25380~25439	RO	3-Φ SM1 UA Individual Harmonic			
25440~25499	RO	3-Φ SM1 UB Individual Harmonic			
25500~25559	RO	3-Φ SM1 UC Individual Harmonic			
25560~25619	RO	3-Φ SM2 UA Individual Harmonic			
25620~25679	RO	3-Φ SM2 UB Individual Harmonic			
25680~25739	RO	3-Φ SM2 UC Individual Harmonic			
25740~25799	RO	3-Φ SM3 UA Individual Harmonic			
25800~25859	RO	3-Φ SM3 UB Individual Harmonic			
25860~25919	RO	3-Φ SM3 UC Individual Harmonic			
25920~25979	RO	3-Φ SM4 UA Individual Harmonic			
25980~26039	RO	3-Φ SM4 UB Individual Harmonic			
26040~26099	RO	3-Φ SM4 UC Individual Harmonic			
26100~26159	RO	3-Φ SM5 UA Individual Harmonic~			
26160~26219	RO	3-Φ SM5 UB Individual Harmonic~			
26220~26279	RO	3-Φ SM5 UC Individual Harmonic~			
26280~26339	RO	3-Φ SM6 UA Individual Harmonic~			
26340~26399	RO	3-Φ SM6 UB Individual Harmonic~			
26400~26459	RO	3-Φ SM6 UC Individual Harmonic~			
26460~26519	RO	3-Φ SM7 UA Individual Harmonic~			
26520~26579	RO	3-Φ SM7 UB Individual Harmonic~			
26580~26639	RO	3-Φ SM7 UC Individual Harmonic~			
26640~26699	RO	3-Φ SM8 UA Individual Harmonic~			
26700~26759	RO	3-Φ SM8 UB Individual Harmonic~			
26760~26819	RO	3-Φ SM8 UC Individual Harmonic~			

~Available when the device is equipped with corresponding option.

Table 5-28 Harmonic Measurements

Notes:

1) The following table illustrates the HD Data Structure for the 3-Φ SMs THD measurements.

Offset	Property	Description	Format	Scale/Unit
+0	RO	Ia THD	FP32	0.001 means 0.1%
+2	RO	Ib THD	FP32	
+4	RO	Ic THD	FP32	
+6	RO	Ia TOHD	FP32	
+8	RO	Ib TOHD	FP32	
+10	RO	Ic TOHD	FP32	
+12	RO	Ia TEHD	FP32	
+14	RO	Ib TEHD	FP32	
+16	RO	Ic TEHD	FP32	

Table 5-29 3-Φ SMs THD Data Structure

2) The following table illustrates the HD Data Structure for the Individual Harmonics measurements.

Offset	Property	Description	Format	Scale/Unit
+0	RO	HD02	FP32	0.001 means 0.1%
+2	RO	HD03	FP32	
+4	RO	HD04	FP32	
+6	RO	HD05	FP32	
+8	RO	HD06	FP32	
+10	RO	HD07	FP32	
+12	RO	HD08	FP32	
+14	RO	HD09	FP32	
+16	RO	HD10	FP32	
+18	RO	HD11	FP32	
+20	RO	HD12	FP32	
+22	RO	HD13	FP32	
+24	RO	HD14	FP32	
+26	RO	HD15	FP32	
+28	RO	HD16	FP32	
+30	RO	HD17	FP32	
+32	RO	HD18	FP32	
+34	RO	HD19	FP32	
+36	RO	HD20	FP32	
+38	RO	HD21	FP32	
+40	RO	HD22	FP32	
+42	RO	HD23	FP32	
+44	RO	HD24	FP32	
+46	RO	HD25	FP32	
+48	RO	HD26	FP32	
+50	RO	HD27	FP32	
+52	RO	HD28	FP32	
+54	RO	HD29	FP32	
+56	RO	HD30	FP32	
+58	RO	HD31	FP32	

Table 5-30 HD Data Structure

5.6 PQ Measurements

Register	Property	Description	Format
27000~27041	RO	3-Φ SM1 PQ Measurements	See Table 5-32 PQ Measurement Data Structure
27042~27083	RO	3-Φ SM2 PQ Measurements	
27084~27125	RO	3-Φ SM3 PQ Measurements	
27126~27167	RO	3-Φ SM4 PQ Measurements	
27168~27209	RO	3-Φ SM5 PQ Measurements~	
27210~27251	RO	3-Φ SM6 PQ Measurements~	
27252~27293	RO	3-Φ SM7 PQ Measurements~	
27294~27335	RO	3-Φ SM8 PQ Measurements~	

~Available when the device is equipped with corresponding option.

Table 5-31 PQ Measurements Register

Offset	Property	Description	Format	Scale/Unit
+0	RO	P Fund.	FLOAT	0.001 means 0.1%
+2	RO	PF Fund.	FLOAT	

+4	RO	P Harmonic	FLOAT	
+6	RO	Ia TDD	FLOAT	
+8	RO	Ib TDD	FLOAT	
+10	RO	Ic TDD	FLOAT	
+12	RO	Ia K-Factor	FLOAT	
+14	RO	Ib K-Factor	FLOAT	
+16	RO	Ic K-Factor	FLOAT	
+18	RO	Ia Crest-Factor	FLOAT	
+20	RO	Ib Crest-Factor	FLOAT	
+22	RO	Ic Crest-Factor	FLOAT	
+24	RO	Pa Fund.	FLOAT	
+26	RO	Pb Fund.	FLOAT	
+28	RO	Pc Fund.	FLOAT	
+30	RO	PFa Fund.	FLOAT	
+32	RO	PFb Fund.	FLOAT	
+34	RO	PFc Fund.	FLOAT	
+36	RO	Pa Harmonic	FLOAT	
+38	RO	Pb Harmonic	FLOAT	
+40	RO	Pc Harmonic	FLOAT	

Table 5-32 PQ Measurements Data Structure

5.7 Log Register

5.7.1 SOE Log

Register	Property	Description	Format
10000-10008	RO	Event 1	See Table 5-34 SOE Log Data Structure
10009-10017	RO	Event 2	
10018-10026	RO	Event 3	
10027-10035	RO	Event 4	
…		…	
11143~11151	RO	Event 128	

Table 5-33 SOE Log

Offset	Property	Description	Format	Range/Note
+0	RO	High-order Byte: Event Classification	UINT16	See Appendix A
		Low-order Byte: Sub-Classification		See Appendix A
+1	RO	High-order Byte: Year	UINT16	00-99 (Year-2000)
		Low-order Byte: Month		1 to 12
+2	RO	High-order Byte: Day	UINT16	1 to 31
		Low-order Byte: Hour		0 to 23
+3	RO	High-order Byte: Minute	UINT16	0 to 59
		Low-order Byte: Second		0 to 59
+4	RO	Millisecond	UINT16	
+5	RO	High-order Byte: Reserved	UINT16	
		Low-order Byte: Status		1=Inactive (Open) 2=Active (Closed)
+6	RO	Event Value-High Word	FLOAT	-
+7	RO	Event Value-Low Word		
+8	RO	Channel No.	UINT16	

Table 5-34 SOE Log Data Structure

5.7.2 Daily Freeze Log

Register	Property	Description	Format	Scale	Unit
20000	RW	Index[1]	UINT32		
20002	RO	High-order Byte: Year (00-99) Low-order Byte: Month (1-12)	UINT16	-	
20003	RO	High-order Byte: Day (1-31) Low-order Byte: Hour (0-23)	UINT16		
20004	RO	High-order Byte: Minute (0-59) Low-order Byte: Second (0-59)	UINT16		
20005	RO	1-Φ SM1 kWh Import	INT32	x0.1	kWh
20007	RO	1-Φ SM1 kWh Export	INT32	x0.1	kWh
20009	RO	1-Φ SM1 kvarh Import	INT32	x0.1	kvarh
20011	RO	1-Φ SM1 kvarh Export	INT32	x0.1	kvarh

...		...			
20189	RO	1-Φ SM24 kWh Import	INT32	x0.1	kWh
20191	RO	1-Φ SM24 kWh Export	INT32	x0.1	kWh
20193	RO	1-Φ SM24 kvarh Import	INT32	x0.1	kvarh
20195	RO	1-Φ SM24 kvarh Export	INT32	x0.1	kvarh
20197	RO	3-Φ SM1 kWh Import	INT32	x0.1	kWh
20199	RO	3-Φ SM1 kWh Export	INT32	x0.1	kWh
20201	RO	3-Φ SM1 kvarh Import	INT32	x0.1	kvarh
20203	RO	3-Φ SM1 kvarh Export	INT32	x0.1	kvarh
...	RO	...			
20253	RO	3-Φ SM8 kWh Import	INT32	x0.1	kWh
20255	RO	3-Φ SM8 kWh Export	INT32	x0.1	kWh
20257	RO	3-Φ SM8 kvarh Import	INT32	x0.1	kvarh
20259	RO	3-Φ SM8 kvarh Export	INT32	x0.1	kvarh

Table 5-35 Daily Freeze Log

Notes:

1) There is no Log Pointer that indicates the current logging position. Writing a value between 1 and 1000 to the **Index** register to retrieve the Daily Freeze Log of the Nth entry. For example, writing 1 to the Index register will retrieve the first day's Daily Freeze Log. If N = 0 or N > 1000, an exception response will be returned with the Illegal Data Value error code (0x03) as defined by the Modbus protocol. If all the returned values of the Nth Log Record (where 1 ≤ N ≤ 1000) are all 0 (including the timestamp), this indicates that the returned Log Record is invalid and that the end of the Log has been reached. If the software is reading the Log for the very first time, it should start with N^{th} and stop when either N=1 or when the returned Log Record is invalid. After that, all the software has to do is to read the Log on a daily basis with N^{th}.
2) The registers of 1-Φ SM13 to 1-Φ SM24 and 3-Φ SM5 to 3-Φ SM8 are reserved if the device's **Branch Feeders** is **4x3-Phase SM**.

5.7.3 Monthly Freeze Log

Register	Property	Description	Format	Scale	Unit
21000	RW	Index[1]	UINT32		
21002	RO	High-order Byte: Year (00-99) Low-order Byte: Month (1-12)	UINT16	-	
21003	RO	High-order Byte: Day (1-31) Low-order Byte: Hour (0-23)	UINT16		
21004	RO	High-order Byte: Minute (0-59) Low-order Byte: Second (0-59)	UINT16		
21005	RO	1-Φ SM1 kWh Import	INT32	x0.1	kWh
21007	RO	1-Φ SM1 kWh Export	INT32	x0.1	kWh
21009	RO	1-Φ SM1 kvarh Import	INT32	x0.1	kvarh
21011	RO	1-Φ SM1 kvarh Export	INT32	x0.1	kvarh
...		...			
21189	RO	1-Φ SM24 kWh Import	INT32	x0.1	kWh
21191	RO	1-Φ SM24 kWh Export	INT32	x0.1	kWh
21193	RO	1-Φ SM24 kvarh Import	INT32	x0.1	kvarh
21195	RO	1-Φ SM24 kvarh Export	INT32	x0.1	kvarh
21197	RO	3-Φ SM1 kWh Import	INT32	x0.1	kWh
21199	RO	3-Φ SM1 kWh Export	INT32	x0.1	kWh
21201	RO	3-Φ SM1 kvarh Import	INT32	x0.1	kvarh
21203	RO	3-Φ SM1 kvarh Export	INT32	x0.1	kvarh
...	RO	...			
21253	RO	3-Φ SM8 kWh Import	INT32	x0.1	kWh
21255	RO	3-Φ SM8 kWh Export	INT32	x0.1	kWh
21257	RO	3-Φ SM8 kvarh Import	INT32	x0.1	kvarh
21259	RO	3-Φ SM8 kvarh Export	INT32	x0.1	kvarh

Table 5-36 Daily Freeze Log

Notes:

1) There is no Log Pointer that indicates the current logging position. Writing a value N between 1 and 36 to the Index register to retrieve the Monthly Freeze Log of the Nth entry. For example, writing 1 to the Index register will retrieve last month's Monthly Freeze Log. If N = 0 or N > 36, an exception response will be returned with the Illegal Data Value error code (0x03) as defined by the Modbus protocol. If all the returned values of the Nth Log Record (where 1 ≤ N ≤ 36) are all 0 (including the timestamp), this indicates that the returned Log Record is invalid and that the end of the Log

has been reached. If the software is reading the Log for the very first time, it should start with N=1 and stop when either N=36 or when the returned Log Record is invalid. After that, all the software has to do is to read the Log on a monthly basis with N=1.

2) The registers of 1-Φ SM13 to 1-Φ SM24 and 3-Φ SM5 to 3-Φ SM8 are reserved if the device's **Branch Feeders** is **4x3-Phase SM**.

5.7.4 Data Recorder Log

Register	Property	Description	Format
22000	RW	DR1 Log Index[1]	See Table 3-38
22002~22125	RO	DR1 Log	
22130	RO	DR2 Log Index[1]	
22132~22255	RO	DR2 Log	
22260	RO	DR3 Log Index[1]	
22262~22385	RO	DR3 Log	
22390	RO	DR4 Log Index[1]	
22392~22515	RO	DR 4 Log	
22520	RO	DR5 Log Index[1]	
22522~22645	RO	DR5 Log	

Table 5-37 DR Log

Register	Property	Description	Format
+0	RO	High-order Byte: Year (00-99) Low-order Byte: Month (1-12)	UINT16
+1	RO	High-order Byte: Day (1-31) Low-order Byte: Hour (0-23)	UINT16
+2	RO	High-order Byte: Minute (0-59) Low-order Byte: Second (0-59)	UINT16
+3	RO	Millisecond	UINT16
+4	RO	Parameter #1	FP32
+6	RO	Parameter #2	FP32
		…	FP32
+22	RO	Parameter #60	FP32

Table 5-38 DR Data Buffer Structure

Notes:

1) Writing a value n to the Data Recorder Index will load the nth Log into the buffer from memory, and the valid range of the DR Index is:
Between ***1*** and ***DR Log Pointer*** when DR Log Pointer ≤ DR Log Depth (see **Section 5.8.7** for DR Log Depth)
Between ***DR Log Pointer - (DR Log Depth - 1)*** and ***DR Log Pointer*** when the DR Log Pointer > DR Log Depth

Writing an index value that points to a Log Record that is either already expired or has not been generated yet to the **DR Log Index** register will generate an exception response with the Illegal Data Value error code (0x03) as defined by the Modbus protocol.

5.8 Device Setup

5.8.1 Basic Setup Parameters

Register	Property	Description	Format	Range, Default*
6000	RW	Wiring Mode	UINT16	0= DEMO, 1=3P4W* 2=3P3W, 3=1P2W L-N
6001	RW	U Primary[1]	UINT32	1 to 1,000,000V, 380*
6002	RW	U Secondary[1]	UINT16	1 to 450V, 380*
6004	RW	PF Convention	UINT16	0=IEC*, 1=IEEE, 2=-IEEE
6005	RW	kVA Calculation	UINT16	0=Vector*, 1=Scalar
6006	RW	kvarh Calculation Method		0=RMS*, 1=Fund
6007	RW	THD Calculation	UINT16	0=Fund*, 1=RMS
6008	RW	Demand Period	UINT16	1* to 60 mins
6009	RW	Number of Sliding Windows	UINT16	1 to 15*
6010	RW	Self-Read Time of Max. Demand Log[2]	UINT16	0 to 65535, 0*
6011	RW	Self-Read Time of Monthly Energy Log[3]	UINT16	0 to 2823, 0*
6012	RW	Self-Read Time of Daily Energy Log[4]	UINT16	0 to 2359, 0*
6013	RW	Energy Pulse Constant	UINT16	0=10 imp/kxh, 1=500 imp/kxh* 2=5000 imp/kxh, 3=10000 imp/kxh

				4=50 imp/kxh
6014	RW	LED Energy Pulse[5]	UINT16	0* to 16
6015	RW	Energy Pulse Width		300* to 500 ms, 50*
6016	RW	Arm before Execute	UINT16	0=Disabled*, 1=Enabled
6017	RW	Date Format	UINT16	0=YYYY/MM/DD* 1=MM/DD/YYYY 2=DD/MM/YYYY
6018	RW	Power Flow	UINT16	0=Normal*, 1=Reverse
6019	RW	Load Type	UINT16	0=Inductive*, 1=Capacitive
6020	RW	Angle Threshold	UINT16	0 to 120°, 5*
6021	RW	Time Zone[6]	UINT16	0 to 32, 13*

Table 5-39 Basic Setup

Notes:

1) The value of [U Primary/U Secondary] cannot exceed 10000.
2) The **Self-Read Time** of the Max. Demand Log supports the following three options:
   - A zero value means that the Self-Read will take place at 00:00 of the first day of each month.
   - A non-zero value means that the Self-Read will take place at a specific time and day based on the formula: Self-Read Time = (Day x 100 + Hour) where 0 ≤ Hour ≤ 23 and 1 ≤ Day ≤ 28. For example, the value 1512 means that the Self-Read will take place at 12:00pm on the 15th day of each month.
   - A 0xFFFF value will disable the Self-Read operation and replace it with manual operation. A manual reset will cause the Max. Demand of **This Month** to be transferred to the Max. Demand of **Last Month** and then reset. The terms **This Month** and **Last Month** will become **Since Last Reset** and **Before Last Reset**.
3) The **Self-Read Time** of the Monthly Freeze Log supports the following two options:
   - A zero value means that the Self-Read will take place at 00:00 of the first day of each month.
   - A non-zero value means that the Self-Read will take place at a specific time and day based on the formula: Self-Read Time = (Day x 100 + Hour) where 0 ≤ Hour ≤ 23 and 1 ≤ Day ≤ 28. For example, the value 1512 means that the Self-Read will take place at 12:00pm on the 15th day of each month.
4) The **Daily Freeze Self-Read Time** can be set to a zero value or a non-zero value:
   - A zero value means that the Self-Read will take place at 00:00 every day.
   - A non-zero value means that the Self-Read will take place at a specific time of the day based on the formula: Self-Read time = (Hour x 100 + Min) where 0 ≤ Hour ≤ 23 and 0 ≤ Min ≤ 59. For example, the value 1512 means that the Self-Read will take place at 15:12 each day.
5) LED Energy Pulse are listed in the table below:

Value	Parameter	Value	Parameter	Value	Parameter
0	Disabled	6	3-Φ SM3 kvarh Total	12	3-Φ SM6 kvarh Total~
1	3-Φ SM1 kWh Total	7	3-Φ SM4 kWh Total	13	3-Φ SM7 kWh Total~
2	3-Φ SM1 kvarh Total	8	3-Φ SM4 kvarh Total	14	3-Φ SM7 kvarh Total~
3	3-Φ SM2 kWh Total	9	3-Φ SM5 kWh Total~	15	3-Φ SM8 kWh Total~
4	3-Φ SM2 kvarh Total	10	3-Φ SM5 kvarh Total~	16	3-Φ SM8 kvarh Total~
5	3-Φ SM3 kWh Total	11	3-Φ SM6 kWh Total~		

~Available when the device is equipped with corresponding option.

Table 5-40 LED Energy Pulse Modes

6) The following table lists the supported Time Zones:

Code	Time Zone	Code	Time Zone
0	GMT-12:00	**17**	GMT+03:30
1	GMT-11:00	**18**	GMT+04:00
2	GMT-10:00	**19**	GMT+04:30
3	GMT-09:00	**20**	GMT+05:00
4	GMT-08:00	**21**	GMT+05:30
5	GMT-07:00	**22**	GMT+05:45
6	GMT-06:00	**23**	GMT+06:00
7	GMT-05:00	**24**	GMT+06:30
8	GMT-04:00	**25**	GMT+07:00
9	GMT-03:30	**26**	GMT+08:00
10	GMT-03:00	**27**	GMT+09:00
11	GMT-02:00	**28**	GMT+09:30
12	GMT-01:00	**29**	GMT+10:00
13	GMT+00:00	**30**	GMT+11:00
14	GMT+01:00	**31**	GMT+12:00
15	GMT+02:00	**32**	GMT+13:00
16	GMT+03:00		

Table 5-41 Time Zones

5.8.2 I/O Setup Parameters

Register	Property	Description	Format	Range, Default*
6050	RW	DO1 Pulse Width	UINT16	0 to 6000 (x0.1s) 0* (Latch Mode)
6051	RW	Reserved	UINT16	
6052	RW	DI1 Debounce~	UINT16	20 to 9999 ms, 40*
6053	RW	DI2 Debounce~	UINT16	
6054	RW	DI3 Debounce~	UINT16	
…	RW	…	UINT16	
6063	RW	DI12 Debounce~	UINT16	
6064	RW	DI1 Function~	UINT16	0=AC*, 1=DC
6065	RW	DI2 Function~	UINT16	
…	RW	…	UINT16	
6075	RW	DI12 Function~	UINT16	
6076	RW	DO2 Pulse Width~	UINT16	0 to 6000 (x0.1s) 0* (Latch Mode)
6077	RW	DO3 Pulse Width~	UINT16	
6078	RW	DO4 Pulse Width~	UINT16	

~Available when the device is equipped with corresponding options.

Table 5-42 DI Setup

5.8.3 Communication Setup Parameters

Register	Property	Description	Format	Range, Default*
6100	RW	COM1 Unit ID	UINT16	1 to 247, 100*
6101	RW	COM1 Baud Rate	UINT16	0=1200, 1=2400, 2=4800, 3=9600*, 4=19200, 5=38400
6102	RW	COM1 Comm. Config.	UINT16	1=8N1, 2=8O1*, 3=8E1 4=8O2, 5=8E2
6103	RW	COM2 Unit ID	UINT16	1 to 247, 101*
6104	RW	COM2 Baud Rate	UINT16	0=1200, 1=2400, 2=4800, 3=9600*, 4=19200, 5=38400
6105	RW	COM2 Comm. Config.	UINT16	1=8N1, 2=8O1*, 3=8E1 4=8O2, 5=8E2

Table 5-43 Communication Setup

5.8.4 3-Φ SMs Setup Parameters

Register	Property	Description	Format	Range, Default*
6120	RW	SM1 CT Primary Current	UINT16	1 to 60000 (A), 100*
6121	RW	SM1 CT Secondary Current	UINT16	0 to 60000 mA (x0.1), 400*
6122	RW	SM1 CT Type	UINT16	0=Solid-Core CT* 1=Split-Core CT
6123	RW	SM1 Current Phase[1]	UINT16	0=IA/IB/C, 1=IB/IC/IA 2=IC/IA/IB, 3=IA/IC/IB 4=IC/IB/IA, 5=IB/IA/IC
6124	RW	SM1 Ia Polarity	UINT16	0=Normal*, 1=Reverse
6125	RW	SM1 Ib Polarity	UINT16	
6126	RW	SM1 Ic Polarity	UINT16	
6127	RW	SM2 CT Primary Current	UINT16	1 to 60000 (A), 100*
…		…		
6133	RW	SM2 Ic Polarity	UINT16	0=Normal*, 1=Reverse
6134	RW	SM3 CT Primary Current	UINT16	1 to 60000 (A), 100*
……	RW	…		
6140	RW	SM3 Ic Polarity	UINT16	0=Normal*, 1=Reverse
6141	RW	SM4 CT Primary Current	UINT16	1 to 60000 (A), 100*
…	RW	…		
6147	RW	SM4 Ic Polarity	UINT16	0=Normal*, 1=Reverse
6148	RW	SM5 CT Primary Current[2]	UINT16	1 to 60000 (A), 100*
…		…		
6154	RW	SM5 Ic Polarity[2]	UINT16	0=Normal*, 1=Reverse
6155	RW	SM6 CT Primary Current[2]	UINT16	1 to 60000 (A), 100*
…		…		
6161	RW	SM6 Ic Polarity[2]	UINT16	0=Normal*, 1=Reverse
6162	RW	SM7 CT Primary Current[2]	UINT16	1 to 60000 (A), 100*
…		…		
6168	RW	SM7 Ic Polarity[2]	UINT16	0=Normal*, 1=Reverse
6169	RW	SM8 CT Primary Current[2]	UINT16	1 to 60000 (A), 100*

…	RW	…		
6175	RW	SM9 Ic Polarity[2]	UINT16	0=Normal*, 1=Reverse

Table 5-44 3-Φ SMs Parameters Setup

Notes:

1) This parameter is used to swap the 3-phase currents (A, B, C) in case of current wiring errors, so as to obtain correct power data. For example: If the actual current wiring sequence is IB, IA, IC, set this parameter to 5(IB/IA/IC).
2) Available when the device is equipped with corresponding options.

5.8.5 Alarm Setup

Register	Property	Description	Format	Range, Default*
6200	RW	SM1 Breaker Rating	UINT16	1 to 30,000 (A), 32*
6201	RW	SM2 Breaker Rating	UINT16	
6202	RW	SM3 Breaker Rating	UINT16	
6203	RW	SM4 Breaker Rating	UINT16	
6204	RW	SM5 Breaker Rating	UINT16	
6205	RW	SM6 Breaker Rating	UINT16	
6206	RW	SM7 Breaker Rating	UINT16	
6207	RW	SM8 Breaker Rating	UINT16	
6208	RW	ULN Alarm Enable[1]	UINT16	0*~7
6209	RW	ULN H Alarm Threshold	UINT16	0* to 6000 (x0.1V)
6210	RW	ULN H Alarm Time Delay	UINT16	0* to 9999 (s)
6211	RW	ULN L Alarm Threshold	UINT16	0* to 6000 (x0.1V)
6212	RW	ULN L Alarm Time Delay	UINT16	0* to 9999 (s)
6213	RW	ULN Alarm Trigger[5]	UINT16	0 to 1 or 0 to 15, 0*
6214	RW	ULL Alarm Enable[2]	UINT16	0 to 7
6215	RW	ULL H Alarm Threshold	UINT16	0* to 10000 (x0.1V)
6216	RW	ULL H Alarm Time Delay	UINT16	0* to 9999 (s)
6217	RW	ULL L Alarm Threshold	UINT16	0* to 10000 (x0.1V)
6218	RW	ULL L Alarm Time Delay	UINT16	0* to 9999 (s)
6219	RW	ULL Alarm Trigger[5]	UINT16	0 to 1 or 0 to 15, 0*
6220	RW	Frequency H Alarm Threshold	UINT16	4500 to 6500* (x0.01Hz)
6221	RW	Frequency H Time Delay	UINT16	0 to 9999 (s), 10*
6222	RW	Frequency L Threshold	UINT16	4500* to 6500 (x0.01Hz)
6223	RW	Frequency L Time Delay	UINT16	0 to 9999 (s), 10*
6224	RW	Frequency Alarm Trigger[5]	UINT16	0 to 1 or 0 to 15, 0*
6225	RW	U Unbalance Alarm Enable	UINT16	0 = Disabled*, 1 = Enabled
6226	RW	U Unbalance Alarm Threshold	UINT16	0 to 1000 (x0.1), 100* e.g. 100 represents 10.0%
6227	RW	U Unbalance Alarm Time Delay	UINT16	0 to 9999 (s), 10*
6228	RW	U Unbalance Alarm Trigger[3]	UINT16	0 to 1 or 0 to 15, 0*
6229	RW	U Phase Reversal Enable[7]	UINT16	0= Disabled*, 1 = Enabled
6230	RW	U Phase Reversal Trigger[5]	UINT16	0 to 1 or 0 to 15, 0*
6231	RW	U Phase Loss Enable	UINT16	0 = Disabled*, 1 = Enabled
6232	RW	U Phase Loss Time Delay	UINT16	0 to 9999 (s), 10*
6233	RW	U Phase Loss Trigger[5]	Bitmap	0 to 1 or 0 to 15, 0*
6234	RW	Current ON Threshold	UINT16	0 to 100 (x0.1%), 50* e.g. 100 represents 10.0%
6235	RW	Current ON Time Delay	UINT16	0 to 9999 (s), 10s*
6236	RW	Current OFF Time Delay	UINT16	0 to 9999 (s), 30s*
6237~6272	RW	3-Φ SM1 Alarm Parameters	See Note 3)	
6273~6308	RW	3-Φ SM2 Alarm Parameters		
6309~6344	RW	3-Φ SM3 Alarm Parameters		
6345~6380	RW	3-Φ SM4 Alarm Parameters		
6381~6416	RW	3-Φ SM5 Alarm Parameters[4]		
6417~6452	RW	3-Φ SM6 Alarm Parameters[4]		
6453~6488	RW	3-Φ SM7 Alarm Parameters[4]		
6489~6524	RW	3-Φ SM8 Alarm Parameters[4]		
6525	RW	DI1 Alarm Configuration	UINT16	0 = Disabled* 1 = DI1 Closed Trigger 2 = DI1 Open Trigger
6526	RW	DI1 Alarm Time Delay	UINT16	0* to 9999 (s)
6527	RW	DI1 Alarm Trigger[5]	Bitmap	0 to 1 or 0 to 15, 0*
…	RW	…		
6558	RW	DI12 Alarm Configuration	UINT16	0 = Disabled*

				1 = DI12 Closed Trigger 2 = DI12 Open Trigger
6559	RW	DI12 Alarm Time Delay	UINT16	0* to 9999 (s)
6560	RW	DI12 Alarm Trigger[5]	UINT16	0 to 1 or 0 to 15, 0*
6561	RW	IR1 Alarm Enable[4]	UINT16	0 = Disabled*, 1 = Enabled
6562	RW	IR1 Alarm Threshold[4]	UINT16	0* to 60000 (x0.1mA)
6563	RW	IR1 Alarm Time Delay[4]	UINT16	0 to 9999 (s), 10*
6564	RW	IR1 Alarm Trigger[4,5]	UINT16	0 to 1 or 0 to 15, 0*
6565	RW	TC1 Alarm Enable[4]	UINT16	0 = Disabled*, 1 = Enabled
6566	RW	TC1 Alarm Threshold[4]	UINT16	0* to 10000 (x0.1°C)
6567	RW	TC1 Alarm Time Delay[4]	UINT16	0 to 9999 (s), 10*
6568	RW	TC1 Alarm Trigger[4,5]	UINT16	0 to 1 or 0 to 15, 0*
6569	RW	TC2 Alarm Enable[4]	UINT16	0 = Disabled*, 1 = Enabled
6570	RW	TC2 Alarm Threshold[4]	UINT16	0* to 10000 (x0.1°C)
6571	RW	TC2 Alarm Time Delay[4]	UINT16	0 to 9999 (s), 10*
6572	RW	TC2 Alarm Trigger[4,5]	UINT16	0 to 1 or 0 to 15, 0*
6573	RW	TC3 Alarm Enable[4]	UINT16	0 = Disabled*, 1 = Enabled
6574	RW	TC3 Alarm Threshold[4]	UINT16	0* to 10000 (x0.1°C)
6575	RW	TC3 Alarm Time Delay[4]	UINT16	0 to 9999 (s), 10*
6576	RW	TC3 Alarm Trigger[4,5]	UINT16	0 to 1 or 0 to 15, 0*
6577	RW	TC4 Alarm Enable[4]	UINT16	0 = Disabled*, 1 = Enabled
6578	RW	TC4 Alarm Threshold[4]	UINT16	0* to 10000 (x0.1°C)
6579	RW	TC4 Alarm Time Delay[4]	UINT16	0 to 9999 (s), 10*
6580	RW	TC4 Alarm Trigger[4, 5]	UINT16	0 to 1 or 0 to 15, 0*
6581	RW	IR2 Alarm Enable[4]	UINT16	0 = Disabled*, 1 = Enabled
6582	RW	IR2 Alarm Threshold[4]	UINT16	0* to 60000 (x0.1mA)
6583	RW	IR2 Alarm Time Delay[4]	UINT16	0 to 9999 (s), 10*
6584	RW	IR2 Alarm Trigger[4, 5]	UINT16	0 to 1 or 0 to 15, 0*
6585	RW	IR3 Alarm Enable[4]	UINT16	0 = Disabled*, 1 = Enabled
6586	RW	IR3 Alarm Threshold[4]	UINT16	0* to 60000 (x0.1mA)
6587	RW	IR3 Alarm Time Delay[4]	UINT16	0 to 9999 (s), 10*
6588	RW	IR3 Alarm Trigger[4, 5]	UINT16	0 to 1 or 0 to 15, 0*
6589	RW	IR4 Alarm Enable[4]	UINT16	0 = Disabled*, 1 = Enabled
6590	RW	IR4 Alarm Threshold[4]	UINT16	0* to 60000 (x0.1mA)
6591	RW	IR4 Alarm Time Delay[4]	UINT16	0 to 9999 (s), 10*
6592	RW	IR4 Alarm Trigger[4, 5]	UINT16	0 to 1 or 0 to 15, 0*

Table 5-45 Alarm Setup Parameters

Notes:

1) The following table illustrates the details of the **ULN Alarm Enable** register with a bit value of 1 meaning enabled and 0 meaning disabled.

ULN Alarm Enable	Bits 3-15	Bit 2	Bit 1	Bit 0
	Reserved	UC	UB	UA

Table 5-46 ULN Alarm Enable Register

2) The following table illustrates the details of the **ULL Alarm Enable** register with a bit value of 1 meaning enabled and 0 meaning disabled.

ULN Alarm Enable	Bits 3-15	Bit 2	Bit 1	Bit 0
	Reserved	UCA	UBC	UAB

Table 5-47 ULL Alarm Enable Register

3) The following table illustrates the details of the 3-Φ SMx Alarm Parameters registers and the SM5 to SM8 are available when the device is equipped with corresponding options.

Offset	Property	Description	Format	Range, Default*
0	RW	Current Alarm Enable	UINT16	0* to 7 Bit 0=IA, Bit 1=IB, Bit 2=IC
1	RW	Current H Alarm Threshold	UINT16	0* to 1000 (x%), 100 represents 10.0%
2	RW	Current H Alarm Time Delay	UINT16	0* to 9999 (s)
3	RW	Current L Alarm Threshold	UINT16	0* to 1000 (x%), 100 represents 10.0%
4	RW	Current L Alarm Time Delay	UINT16	0* to 9999 (s)
5	RW	Current Alarm Trigger[5]	UINT16	0 to 1 or 0 to15, 0*
6	RW	P Alarm Enable	UINT16	0 = Disabled*, 1 = Enabled Bit 0=Phase A, Bit 1= Phase B, Bit 2= Phase C, Bit 3= TOT
7	RW	P H Alarm Threshold	UINT32	0 to 999,999 W, 1000*
9	RW	P H Alarm Time Delay	UINT16	0 to 9999 (s), 10*

10	RW	P L Alarm Threshold	UINT32	0 to 999,999 W, 0*
12	RW	P L Alarm Time Delay	UINT16	0 to 9999 (s), 10*
13	RW	P Alarm Trigger[5]	UINT16	0 to 1 or 0 to15, 0*
14	RW	Q Alarm Enable	UINT16	0 = Disabled*, 1 = Enabled Bit 0=Phase A, Bit 1= Phase B, Bit 2= Phase C, Bit 3= TOT
15	RW	Q H Alarm Threshold	UINT32	0 to 999,999 var, 1000*
17	RW	Q H Alarm Time Delay	UINT16	0 to 9999 (s), 10*
18	RW	Q L Alarm Threshold	UINT32	0 to 999,999 var, 0*
20	RW	Q L Alarm Time Delay	UINT16	0 to 9999 (s), 10*
21	RW	Q Alarm Trigger[5]	UINT16	0 to 1 or 0 to15, 0*
22	RW	S Alarm Enable	UINT16	0 = Disabled*, 1 = Enabled Bit 0=Phase A, Bit 1= Phase B, Bit 2= Phase C, Bit 3= TOT
23	RW	S H Alarm Threshold	UINT32	0 to 999,999 VA, 1000*
25	RW	S H Alarm Time Delay	UINT16	0 to 9999 (s), 10*
26	RW	S L Alarm Threshold	UINT32	0 to 999,999 VA, 0*
28	RW	S L Alarm Time Delay	UINT16	0 to 9999 (s), 10*
29	RW	S Alarm Trigger[5]	UINT16	0 to 1 or 0 to15, 0*
30	RW	I Unbalance Alarm Enable	UINT16	0 = Disabled*, 1 = Enabled
31	RW	I Unbalance Alarm Threshold	UINT16	0 to 1000, 100*, 100 represents 10.0%
32	RW	I Unbalance Alarm Time Delay	UINT16	0 to 9999 (s), 10*
33	RW	I Unbalance Alarm Trigger[5]	UINT16	0 to 1 or 0 to15, 0*
34	RW	Phase Reversal Alarm Enable	UINT16	0 = Disabled*, 1 = Enabled
35	RW	Phase Reversal Alarm Trigger[5]	UINT16	0 to 1 or 0 to15, 0*

Table 5-48 3-Φ SMs Alarm Parameters

4) Available when the device is equipped with corresponding options.
5) The following table illustrates the details of the **xx Alarm Trigger** register with a bit value of 1 meaning enabled and 0 meaning disabled.

***xx* Alarm Trigger**	**Bits 2-15**	**Bit 3**	**Bit 2**	**Bit 1**	**Bit 0**
	Reserved	DO4	DO3	DO2	DO1

Table 5-49 *xx* Alarm Trigger Register

5.8.6 Maintenance Setup

Register	Property	Description	Format	Range, Default*
6700	RW	User Password	UINT16	0* to 9999
6701	RW	Backlight Time-out	UINT16	0 to 60 min, 5*
6702	RW	LCD Contrast	UINT16	0 to 9, 5*
6703	RW	Language	UINT32	English

Table 5-50 Maintenance Parameter Setup

5.8.7 Data Recorder Setup

Register	Property	Description		Format	Range, Default*
6800	RW	DR1	Trigger Mode	UINT16	0=Disabled*, 1=Enabled
6801	RW		Recording Mode	UINT16	0=Stop-When-Full 1=First-In-First-Out*
6802	RW		Recording Depth	UINT16	0 to 5000*
6803	RW		Recording Interval	UINT32	60 to 345600s, 600*
6805	RW		Recording Offset	UINT16	0* to 43200s
6806	RW		Parameters Number	UINT16	0* to 60
6807	RW		Parameter 1	UINT16	
6808	RW		Parameter 2	UINT16	
…	RW		…	UINT16	
6866	RW		Parameter 60	UINT16	
6870~6936	RW	See DR1		UINT16	
6940~7006	RW	See DR1		UINT16	
7010~7076	RW	See DR1		UINT16	
7080~7146	RW	See DR1		UINT16	

Table 5-51 DR Parameters Setup

5.8.8 Ethernet Setup (Optional)

Register	Property	Description	Format	Range, Default*
7600	RW	DHCP Enable	UINT16	0=Disable, 1=Enable
7601	RW	IP Address	UINT32	192.168.8.97 (0xC0A80861)
7603	RW	Subnet Mask	UINT32	255.255.255.000
7605	RW	Gateway	UINT32	192.168.000.001
7607	RW	Modbus TCP Port	UINT16	1~65535, 502*
7608	RW	MQTT Protocol	UINT32	1=CetMQTT, 2=Reserved
7609	RW	MQTT Server IP Address	UINT32	Domain name mode is enabled when the value is 0
7611~7642	RW	MQTT Server Domain	UINT16	
7643	RW	MQTT Server Port	UINT16	
7644	RW	SNTP Server IP	UINT32	
7646	RW	SNTP Interval	UINT16	0 to 9999 min, 60* 0 will disable SNTP.

Table 5-52 Ethernet Setup Parameter

5.8.9 MQTT Setup (Optional)

Register	Property	Description	Format
27500~27964	RW	Ethernet MQTT Parameters	See Table 5-54
28000~28464	RW	Link 1 MQTT Parameters	
28500~28964	RW	Link 2 MQTT Parameters	
29000~29464	RW	Link 3 MQTT Parameters	

Table 5-53 MQTT Setup Parameter

Offset	Property	Description	Format	Range, Default*
0	RW	MQTT Server Type	UINT16	1=Connect to Private Server* 2=Connect to Alibaba Cloud Server
1	RW	MQTT Upload App Layer ACK	UINT16	0=QoS 1 Upload, Server ACK only* 1=QoS 1 Upload, Server + Platform ACK
2	RW	QoS 1 Timeout Wait Time	UINT16	10~100 s, 90*
3	RW	MQTT Protocol Type	UINT16	1=China Electric Cloud* 2=Alibaba Cloud Protocol 3=User-Defined
4	RW	Optional MQTT Username	UINT16	0=Current Value (No update on reconnection)* 1=ICCID (Update on reconnection)
5~9	RW	Reserved	UINT16	
10~41	RW	MQTT ClientID	UINT16	CET/PMC-512/10
42~44	RW	Reserved	UINT16	
45~76	RW	MQTT UserName	UINT16	admin
77~79	RW	Reserved	UINT16	
80~111	RW	MQTT Password	UINT16	QE&35dh
112~114	RW	Reserved	UINT16	
115~146	RW	MQTT Upload Topic 1	UINT16	CET/PMC-512/*SN*/upload
147~149	RW	Reserved	UINT16	
150~181	RW	MQTT Upload Topic 2	UINT16	
182~184	RW	Reserved	UINT16	
185~216	RW	MQTT Upload Topic 3	UINT16	
217~219	RW	Reserved	UINT16	
220~251	RW	MQTT Upload Topic 4	UINT16	
252~254	RW	Reserved	UINT16	
255~286	RW	MQTT Upload Topic 5	UINT16	
287~289	RW	Reserved	UINT16	
290~321	RW	MQTT Download Topic 1	UINT16	CET/PMC-512/*SN*/download
322~324	RW	Reserved	UINT16	
325~356	RW	MQTT Downlink Topic 2	UINT16	
357~359	RW	Reserved	UINT16	
360~391	RW	MQTT Downlink Topic 3	UINT16	
392~394	RW	Reserved	UINT16	
395~426	RW	MQTT Downlink Topic 4	UINT16	
427~429	RW	Reserved	UINT16	
430~461	RW	MQTT Downlink Topic 5	UINT16	

462~464	RW	Reserved	UINT16	

Table 5-54 MQTT Setup Parameter Data Structure

5.8.10 TOU Setup

5.8.10.1 Basic

Register	Property	Description	Format	Range/Option
7700	RO	Current Tariff	UINT16	0=T1, 1=T2, 2=T3, 3=T4, 4=T5, 5=T6
7701	RO	Current Season	UINT16	0 to 11 (Season #1 to #12)
7702	RO	Current Period	UINT16	0 to 13 (Period #1 to #14)
7703	RO	Current Daily Profile No.	UINT16	0 to 11 (Daily Profile #1 to #12)
7704	RO	Current Day Type	UINT16	0=Weekday1, 1=Weekday2 2=Weekday3, 3= Alternate Day
7705	RO	Current TOU No.	UINT16	0=TOU #1, 1=TOU #2
7706	RW	TOU Switch Time	UINT32	See Note (1)
7708	RW	Reserved	UINT16	
7709	RW	Sunday Setup	UINT16	0=Weekday1* 1=Weekday2 2=Weekday3
7710	RW	Monday Setup	UINT16	
7711	RW	Tuesday Setup	UINT16	
7712	RW	Wednesday Setup	UINT16	
7713	RW	Thursday Setup	UINT16	
7714	RW	Friday Setup	UINT16	
7715	RW	Saturday Setup	UINT16	

Table 5-55 TOU Basic Setup

Notes:

1) The following table illustrates the data structure for the TOU Switch Time. For example, 0x1003140C indicates a switch time of 12:00pm on March 20th, 2016. Writing 0xFFFFFFFF to this register disables the switching between TOU Schedule.

Bit 24 to 31	Bit 16 to 23	Bit 9 to 15	Bit 0 to 8
Year-2000 (0-99)	Month (1-12)	Day (1-31)	Hour (00-23)

Table 5-56 TOU Switch Time Format

5.8.10.2 Season

The PMC-512-M has two sets of Season setup parameters, one for each TOU. The Base Addresses for the two sets are 7800 and 8400, respectively, where the Register Address = Base Address + Offset. For example, the register address for TOU #1's Season #2's Start Date is 7800+4 = 7804.

Offset	Property	Description	Format	Range/Default*
0	RW	Season #1: Start Date	UINT16	0x0101*
1	RW	Season #1: Weekday#1 Daily Profile	UINT16	0* to 11
2	RW	Season #1: Weekday#2 Daily Profile	UINT16	
3	RW	Season #1: Weekday#3 Daily Profile	UINT16	
4	RW	Season #2: Start Date	UINT16	High-order Byte: Month Low-order Byte: Day
5	RW	Season #2: Weekday#1 Daily Profile	UINT16	0* to 11
6	RW	Season #2: Weekday#2 Daily Profile	UINT16	
7	RW	Season #2: Weekday#3 Daily Profile	UINT16	
8	RW	Season #3: Start Date	UINT16	See Season #2: Start Date
9	RW	Season #3: Weekday#1 Daily Profile	UINT16	0* to 11
10	RW	Season #3: Weekday#2 Daily Profile	UINT16	
11	RW	Season #3: Weekday#3 Daily Profile	UINT16	
12	RW	Season #4: Start Date	UINT16	See Season #2: Start Date
13	RW	Season #4: Weekday#1 Daily Profile	UINT16	0* to11
14	RW	Season #4: Weekday#2 Daily Profile	UINT16	
15	RW	Season #4: Weekday#3 Daily Profile	UINT16	
16	RW	Season #5: Start Date	UINT16	See Season #2: Start Date
17	RW	Season #5: Weekday#1 Daily Profile	UINT16	0* to 11
18	RW	Season #5: Weekday#2 Daily Profile	UINT16	
19	RW	Season #5: Weekday#3 Daily Profile	UINT16	
20	RW	Season #6: Start Date	UINT16	See Season #2: Start Date
21	RW	Season #6: Weekday#1 Daily Profile	UINT16	0* to 11
22	RW	Season #6: Weekday#2 Daily Profile	UINT16	
23	RW	Season #6: Weekday#3 Daily Profile	UINT16	
24	RW	Season #7: Start Date	UINT16	See Season #2: Start Date

25	RW	Season #7: Weekday#1 Daily Profile	UINT16	0* to 11
26	RW	Season #7: Weekday#2 Daily Profile	UINT16	
27	RW	Season #7: Weekday#3 Daily Profile	UINT16	
28	RW	Season #8: Start Date	UINT16	See Season #2: Start Date
29	RW	Season #8: Weekday#1 Daily Profile	UINT16	0* to 11
30	RW	Season #8: Weekday#2 Daily Profile	UINT16	
31	RW	Season #8: Weekday#3 Daily Profile	UINT16	
32	RW	Season #9: Start Date	UINT16	See Season #2: Start Date
33	RW	Season #9: Weekday#1 Daily Profile	UINT16	0* to 11
34	RW	Season #9: Weekday#2 Daily Profile	UINT16	
35	RW	Season #9: Weekday#3 Daily Profile	UINT16	
36	RW	Season #10: Start Date	UINT16	See Season #2: Start Date
37	RW	Season #10: Weekday#1 Daily Profile	UINT16	0* to 11
38	RW	Season #10: Weekday#2 Daily Profile	UINT16	
39	RW	Season #10: Weekday#3 Daily Profile	UINT16	
40	RW	Season #11: Start Date	UINT16	See Season #2: Start Date
41	RW	Season #11: Weekday#1 Daily Profile	UINT16	0* to 11
42	RW	Season #11: Weekday#2 Daily Profile	UINT16	
43	RW	Season #11: Weekday#3 Daily Profile	UINT16	
44	RW	Season #12: Start Date	UINT16	See Season #2: Start Date
45	RW	Season #12: Weekday#1 Daily Profile	UINT16	0* to 11
46	RW	Season #12: Weekday#2 Daily Profile	UINT16	
47	RW	Season #12: Weekday#3 Daily Profile	UINT16	

Table 5-57 Season Setup

Notes:

1) **Start Date** for Season #1 can be set as any day within the calendar year.
2) Setting a Season's **Start Date** as 0xFFFF terminates the TOU's Season settings. All subsequent Seasons' setup parameters will be ignored since the previous Season's duration is from its **Start Date** to the end of the year.
3) The **Start Date** of a particular Season must be later than the previous Season's.

5.8.10.3 Daily Profile

The PMC-512-M has two sets of Daily Profile setup parameters, one for each TOU.

Register	Property	Description	Format
7900~7927	RW	Daily Profile #1	See Table 5-60 Daily Profile Data Structure
7928~7955	RW	Daily Profile #2	
7956~7983	RW	Daily Profile #3	
7984~8011	RW	Daily Profile #4	
8012~8039	RW	Daily Profile #5	
8040~8067	RW	Daily Profile #6	
8068~8095	RW	Daily Profile #7	
8096~8123	RW	Daily Profile #8	
8124~8151	RW	Daily Profile #9	
8152~8179	RW	Daily Profile #10	
8180~8207	RW	Daily Profile #11	
8208~8235	RW	Daily Profile #12	

Table 5-58 TOU #1's Daily Profile Setup

Register	Property	Description	Format
8500~8527	RW	Daily Profile #1	See Table 5-60 Daily Profile Data Structure
8528~8555	RW	Daily Profile #2	
8556~8583	RW	Daily Profile #3	
8584~8611	RW	Daily Profile #4	
8612~8639	RW	Daily Profile #5	
8640~8667	RW	Daily Profile #6	
8668~8695	RW	Daily Profile #7	
8696~8723	RW	Daily Profile #8	
8724~8751	RW	Daily Profile #9	
8752~8779	RW	Daily Profile #10	
8780~8807	RW	Daily Profile #11	
8808~8835	RW	Daily Profile #12	

Table 5-59 TOU #2's Daily Profile Setup

Offset	Property	Description		Format	Note
+0	RW	Period #1 Start Time		UINT16	0x0000*
+1	RW	Period #1 Tariff		UINT16	0=T1, …, 5=T6
+2	RW	Period #2 Start Time	High-order Byte: Hour	UINT16	0 ≤ Hour < 24
			Low-order Byte: Min		Min = 0, 15, 30, 45
+3	RW	Period #2 Tariff		UINT16	0=T1, …, 5=T6
+4	RW	Period #3 Start Time		UINT16	See Period #2 Start Time
+5	RW	Period #3 Tariff		UINT16	0=T1, …, 5=T6
+6	RW	Period #4 Start Time		UINT16	See Period #2 Start Time
+7	RW	Period #4 Tariff		UINT16	0=T1, …, 5=T6
+8	RW	Period #5 Start Time		UINT16	See Period #2 Start Time
+9	RW	Period #5 Tariff		UINT16	0=T1, …, 5=T6
+10	RW	Period #6 Start Time		UINT16	See Period #2 Start Time
+11	RW	Period #6 Tariff		UINT16	0=T1, …, 5=T6
+12	RW	Period #7 Start Time		UINT16	See Period #2 Start Time
+13	RW	Period #7 Tariff		UINT16	0=T1, …, 5=T6
+14	RW	Period #8 Start Time		UINT16	See Period #2 Start Time
+15	RW	Period #8 Tariff		UINT16	0=T1, …, 5=T6
+16	RW	Period #9 Start Time		UINT16	See Period #2 Start Time
+17	RW	Period #9 Tariff		UINT16	0=T1, …, 5=T6
+18	RW	Period #10 Start Time		UINT16	See Period #2 Start Time
+19	RW	Period #10 Tariff		UINT16	0=T1, …, 5=T6
+20	RW	Period #11 Start Time		UINT16	See Period #2 Start Time
+21	RW	Period #11 Tariff		UINT16	0=T1, …, 5=T6
+22	RW	Period #12 Start Time		UINT16	See Period #2 Start Time
+23	RW	Period #12 Tariff		UINT16	0=T1, …, 5=T6
+24	RW	Period #13 Start Time		UINT16	See Period #2 Start Time
+25	RW	Period #13 Tariff		UINT16	0=T1, …, 5=T6
+26	RW	Period #14 Start Time		UINT16	See Period #2 Start Time
+27	RW	Period #14 Tariff		UINT16	0=T1, …, 5=T6

Table 5-60 Daily Profile Data Structure

Notes:

1) **Daily Profile #1's Period #1 Start Time** can be set to any time of day.
2) Setting a Period's **Start Time** as 0xFFFF terminates the Daily Profile's settings. All subsequent Daily Profiles' setup parameters will be ignored, and the previous Period's duration is from its **Start Time** to the end of the day.
3) The minimum interval of a period is 15 minutes.
4) The **Start Time** of a particular Period must be later than the previous Period's.

5.8.10.4 Alternate Days

Each Alternate Day is assigned a Daily Profile and has a higher priority than Season. If a particular date is set as an Alternate Day, its assigned Daily Profile will override the "normal" Daily Profile for this day according the TOU settings.

The PMC-512-M has two sets of Alternate Days setup parameters, one for each TOU. The Base Addresses for the two sets are 8300 and 8900, respectively, where the Register Address = Base Address + Offset. For example, the register address for TOU #2's Alternative Day #2's Date is 8300+3 = 8303.

Offset	Property	Description	Format	Range/Default*
0	RW	Alternate Day #1 Date[1]	UINT32	Table 5-62
2	RW	Alternate Day #1 Daily Profile	UINT16	0* to 19
3	RW	Alternate Day #2 Date[1]	UINT32	Table 5-62
5	RW	Alternate Day #2 Daily Profile	UINT16	0* to 19
6	RW	Alternate Day #3 Date[1]	UINT32	Table 5-62
8	RW	Alternate Day #3 Daily Profile	UINT16	0* to 19
9	RW	Alternate Day #4 Date[1]	UINT32	Table 5-62
11	RW	Alternate Day #4 Daily Profile	UINT16	0* to 19
12	RW	Alternate Day #5 Date[1]	UINT32	Table 5-62
14	RW	Alternate Day #5 Daily Profile	UINT16	0* to 19
15	RW	Alternate Day #6 Date[1]	UINT32	Table 5-62
17	RW	Alternate Day #6 Daily Profile	UINT16	0* to 19
18	RW	Alternate Day #7 Date[1]	UINT32	Table 5-62
19	RW	Alternate Day #7 Daily Profile	UINT16	0* to 19
21	RW	Alternate Day #8 Date[1]	UINT32	Table 5-62
22	RW	Alternate Day #8 Daily Profile	UINT16	0* to 19

24	RW	Alternate Day #9 Date[1]	UINT32	Table 5-62
25	RW	Alternate Day #9 Daily Profile	UINT16	0* to 19
27	RW	Alternate Day #10 Date[1]	UINT32	Table 5-62
29	RW	Alternate Day #10 Daily Profile	UINT16	0* to 19
…		…		
…		…		
57	RW	Alternate Day #20 Date[1]	UINT32	Table 5-62
59	RW	Alternate Day #20 Daily Profile	UINT16	0* to 19

Table 5-61 Alternate Days Setup

Notes:

1) The following table illustrates the data structure of the Date register:

Bit 24 to 31	Bit 16 to 23	Bit 9 to 15	Bit 0 to 8
Reserved	Year-2000 (0-99)	Month (1-12)	Day (1-31)

Table 5-62 Date Format

When the Year and/or Month are set as **0xFF**, it means the Alternate Day is repetitive by year and/or month, i.e. the same day of every year or every month is an Alternate Day.

5.9 Remote Control (Optional)

The DO Control registers are implemented as both "Write-Only" Modbus Coil Registers (0XXXXX) and Modbus Holding Registers (4XXXXX), which can be controlled with the Force Single Coil command (Function Code 0x05) or the Preset Multiple Hold Registers (Function Code 0x10). The PMC-512-M does not support the Read Coils command (Function Code 0x01) because DO Control registers are "Write-Only".

The PMC-512-M adopts the ARM before EXECUTE operation for the remote control of its Digital Outputs if this function is enabled through the **Arm Before Execute Enable** Setup register (6016), which is disabled by default. Before executing an OPEN or CLOSE command on a Digital Output, it must be "Armed" first. This is achieved by writing the value 0xFF00 to the appropriate register to "Arm" a particular DO operation. The DO will be "Disarmed" automatically if an "Execute" command is not received within 15 seconds after it has been "Armed". If an "Execute" command is received without first having received an "Arm" command, the meter ignores the "Execute" command and returns the 0x04 exception code.

Register	Property	Description	Format	Note
9100	WO	Arm DO1 Close	UINT16	Writing "0xFF00" to the register to perform the described action.
9101	WO	Execute DO1 Close	UINT16	
9102	WO	Arm DO1 Open	UINT16	
9103	WO	Execute DO1 Open	UINT16	
9104	WO	Arm DO2 Close	UINT16	Available when the device is equipped with corresponding options. Writing "0xFF00" to the register to perform the described action.
9105	WO	Execute DO2 Close	UINT16	
9106	WO	Arm DO2 Open	UINT16	
9107	WO	Execute DO2 Open	UINT16	
9108	WO	Arm DO3 Close	UINT16	
9109	WO	Execute DO3 Close	UINT16	
9110	WO	Arm DO3 Open	UINT16	
9111	WO	Execute DO3 Open	UINT16	
9112	WO	Arm DO4 Close	UINT16	
9113	WO	Execute DO4 Close	UINT16	
9114	WO	Arm DO4 Open	UINT16	
9115	WO	Execute DO4 Open	UINT16	

Table 5-63 DO Control

5.10 Clear/Reset Control

Register	Property	Description	Format	Note
9600	WO	Clear Energy	UINT16	See Note 1)
9601	WO	Clear Max. Demand of This Month (Since Last Reset)	UINT16	See Note 2)
9602	WO	Clear SOE Log	UINT16	Writing "0xFF00" to the register executes the described action
9603	WO	Clear All Demands Logs	UINT16	
9604	WO	Clear All DR Logs	UINT16	
9605	WO	Clear DR1 Log	UINT16	
9606	WO	Clear DR2 Log	UINT16	
9607	WO	Clear DR3 Log	UINT16	
9608	WO	Clear DR4 Log	UINT16	
9609	WO	Clear DR5 Log	UINT16	

9610	WO	Cleary Daily Freeze Log	UINT16	
9611	WO	Clear Monthly Freeze Log	UINT16	
9612	WO	Clear All[3]	UINT16	
9613	WO	Reserved	UINT16	
9614	WO	Switch TOU Schedule Manually	UINT16	

Table 5-64 Clear/Reset Control Setup

Notes:

1) The following table provides a detailed description of the different values that can be written to the **Clear Energy** register to clear the different Energy register for SMx.

Key	Clear Energy & Demand		Description
	High Order	Low Order	
1	0x01 (1-Φ SMx)	0x00	Clear 1-Φ SM1 (0x0100)
		0x01	Clear 1-Φ SM2 (0x0101)
		…	…
		0x24	Clear 1-Φ SM24 (0x0124)
2	0x02 (3-Φ SMx)	0x00	Clear 3-Φ SM1 Energy (0x0200)
		0x01	Clear 3-Φ SM2 Energy (0x0201)
		…	…
		0x08	Clear 3-Φ SM8 Energy (0x0208)
4	0xFF00		Clear 1-Φ SMs and 3-Φ SMs Energy (0xFF00)

Table 5-65 Clear Energy Register Values

2) For Clear **Max. Demand of This Month (Since Last Reset)**, writing "0xFF01 ~ 0xFF08" to the register clears Max. Demands Logs of 3-Φ SM1 to 3-Φ SM8 and writing 0xFF00 to the register clears all 3-Φ SMs Max. Demand Logs.

3) Writing 0xFF00 to the **Clear All Data** register to perform the Clear operation for the actions specified in registers # 9600 to 9614.

5.11 Time Registers

There are two sets of Time registers supported by the PMC-PMC-512-M – Year / Month / Day / Hour / Minute / Second (Registers # 60000 to 60002) and UNIX Time (Register # 60004). When sending time to the PMC-512-M over Modbus communications, care should be taken to only write one of the two Time register sets. All registers within a Time register set must be written in a single transaction. If registers 60000 to 60004 are being written to at the same time, both Time register sets will be updated to reflect the new time specified in the UNIX Time register set (60004) and the time specified in registers 60000-60002 will be ignored. Writing to the Millisecond register (60003) is optional during a Time Set operation. When broadcasting time, the function code must be set to 0x10 (Pre-set Multiple Registers). Incorrect date or time values will be rejected by the meter. In addition, attempting to write a Time value less than Jan 1, 2000 00:00:00 will be rejected.

Register		Property	Description	Format	Note
60000	9000	RW	High-order Byte: Year	UINT16	10-90 (Year-2000)
			Low-order Byte: Month		1 to 12
60001	9001	RW	High-order Byte: Day	UINT16	1 to 31
			Low-order Byte: Hour		0 to 23
60002	9002	RW	High-order Byte: Minute	UINT16	0 to 59
			Low-order Byte: Second		0 to 59
60003	9003	RW	Millisecond	UINT16	0 to 999
60004 ~ 60005	9004 ~ 9005	RW	UNIX Time	UINT32	0x4B3D3B00 to 0xE398E47F The corresponding time is 2010.01.01 00:00:00 to 2090.12.31 23:59:59 (GMT 0:00 Time Zone)

Table 5-66 Time Registers

5.12 Meter Information

Register		Property	Description	Format	Note
60200 ~ 60219	9800 ~ 9819	RO	Meter model	UINT16	See Note 1)
60220	9820	RO	Firmware Version	UINT16	e.g. 10000 shows the version is V1.00.00
60221	9821	RO	Modbus Version	UINT16	e.g. 10 shows the version is V1.0

60222	9822	RO	Firmware Update Date: Year-2000	UINT16	e.g. 260110 means January 10, 2026
60223	9823	RO	Firmware Update Date: Month	UINT16	
60224	9824	RO	Firmware Update Date: Day	UINT16	
60225	9825	RO	Serial Number: High-Order Byte	UINT16	
60026	9826	RO	Serial Number: Low-Order Byte	UINT16	
60227	9827	RO	Feature Code[2]	UINT16	
60228	9828	RO	Hardware Version	UINT16	e.g. 10 shows the version is V1.0
60229	9829	RO	Actual IP Address	UINT32	
60231	9831	RO	Actual Subnet Mask	UINT32	
60233	9833	RO	Actual Gateway	UINT32	

Table 5-67 Meter Information

Notes:

1) The Meter Model appears in registers 9800 to 9819 (60200 to 60219) and contains the ASCII encoding of the string "PMC-512-M" as shown in the following table.

Register		Value (Hex)	ASCII
60200	9800	0x50	P
60201	9801	0x4D	M
60202	9802	0x43	C
60203	9803	0x2D	-
60204	9804	0x35	5
60205	9805	0x31	1
60206	9806	0x32	2
60207	9807	0x2D	-
60208	9808	0x4D	M
60209-60219	9809-9819	0x20	<Null>

Table 5-68 ASCII Encoding of "PMC-512-M"

2) The following table illustrates the details for the Feature Code register.

Bits 15 to 7	Bits 6 to 4	Bits 3 to 2	Bits 1 to 0
Reserved	000=1xDO 001=1xDO + 1xIR + 12xIN + 4xNTC 010=4xDO + 4xIR + 4xNTC	00=None 01=Reserved 10=Ethernet	00=4x3-Phase SM 01=8x3-Phase SM

Table 5-69 Feature Code for PMC-512-M

Appendix A - SOE Event Classification

Event Classification	Sub-Classification	Channel	Event Value	DPI	Description
1	1	-	-	2/1	DI1 Close/DI1 Open
	2	-	-	2/1	DI2 Close/DI2 Open
	3	-	-	2/1	DI3 Close/DI3 Open
	4	-	-	2/1	DI4 Close/DI4 Open
	5	-	-	2/1	DI5 Close/DI5 Open
	6	-	-	2/1	DI6 Close/DI6 Open
	7	-	-	2/1	DI7 Close/DI7 Open
	8	-	-	2/1	DI8 Close/DI8 Open
	9	-	-	2/1	DI9 Close/DI9 Open
	10	-	-	2/1	DI10 Close/DI10 Open
	11	-	-	2/1	DI11 Close/DI11 Open
	12	-	-	2/1	DI12 Close/DI12 Open
2	1	-	-	2/1	DO1 Close/Open by Remote Control
	2	-	-	2/1	DO1 Close/Open by Alarm
	3	-	-	2/1	DO2 Close/Open by Remote Control
	4	-	-	2/1	DO2 Close/Open by Alarm
	5	-	-	2/1	DO3 Close/Open by Remote Control
	6	-	-	2/1	DO3 Close/Open by Alarm
	7	-	-	2/1	DO4 Close/Open by Remote Control
	8	-	-	2/1	DO4 Close/Open by Alarm
3	1	Alarm Channels[1]	Trigger Value	Active / Return	Current H Alarm
	2		Trigger Value		Current L Alarm
	3		Trigger Value		Voltage H Alarm
	4		Trigger Value		Voltage L Alarm
	5		Trigger Value		Frequency H Alarm
	6		Trigger Value		Frequency L Alarm
	7		Trigger Value		Voltage Unbalance Alarm
	8		Trigger Value		Current Unbalance Alarm
	9		-		Voltage Phase Reversal Alarm
	10		-		Current Phase Reversal Alarm
	11		-		Voltage Phase Loss Alarm
	12		Trigger Value		DI Alarm
	13		Trigger Value		P H Alarm
	14		Trigger Value		P L Alarm
	15		Trigger Value		Q H Alarm
	16		Trigger Value		Q L Alarm
	17		Trigger Value		S H Alarm
	18		Trigger Value		S L Alarm
	19		Trigger Value		IR Alarm
	20		Trigger Value		TC Alarm
4	1	-	-	-	First Power On
	2	-	-	-	A/D Fault
	3	-	-	-	Internal Power Fault
	4	-	-	-	FRAM Fault
	5	-	-	-	FLASH Fault
	6	-	-	-	System Parameters Fault
	7	-	-	-	Internal Parameters Fault
5	1	-	-	-	Power On
	2	-	-	-	Power Off
	3	-	-	Method: 1=Front Panel 2=Modbus	Set Time
	4	-	-		Set Maintenance Parameters
	5	-	-		Set System Parameters
	6	-	-		Set I/O Parameters
	7	-	-		Set Communication Parameters
	8	-	-		Set SMs Parameters
	9	-	-		Set Alarm Parameters
	10	-	-		Set DR Parameters
	11	-	-		Reserved
	12	-	-		Reserved
	13	-	-		Set MQTT Parameters
	14	-	-		Set DR User-Level Parameters
	15	-	-		Set TOU Parameters

	16	-	-		Set Calibration Parameters
	17	SMs[3]	-		Clear Energy
	18		-		Clear Max. Demand of This Month
	19	-	-		Clear All Demand
	20	-	-		Clear SOE
	21	x=1-5	-		Clear DRx
	22	-	-		Clear Daily Freeze Log
	23		-		Clear Monthly Freeze Log
	24		-		Clear All Data
	25		-		Reset to Factory Default Configuration
	26		-		Preset Energy
	27	-	-	-	Reserved
	28	-	-	-	Preset TOU Energy
	29	-	-	1-4	Switch TOU Schedule[2]
	30	-	-	-	Auxiliary Power Loss
	31	-	-	Front Panel	Set Ethernet Parameter

Notes:

1) The following table provides a detailed description of the Channel Number.

Channel	Description	Channel	Description	Channel	Description
1	3-Φ SM 1 Phase A	33	3-Φ SM2	48	DI9
2	3-Φ SM 1 Phase B	34	3-Φ SM3	49	DI10
3	3-Φ SM 1 Phase C	35	3-Φ SM4	50	DI11
…	…	36	3-Φ SM5	51	DI12
22	3-Φ SM 8 Phase A	37	3-Φ SM6	52	Voltage
23	3-Φ SM 8 Phase B	38	3-Φ SM7	53	IR1
24	3-Φ SM 8 Phase C	39	3-Φ SM8	54	TC1
25	UA	40	DI1	55	TC2
26	UB	41	DI2	56	TC3
27	UC	42	DI3	57	TC4
28	UAB	43	DI4	58	IR3
29	UBC	44	DI5	59	IR3
30	UCA	45	DI6	60	IR4
31	Frequency	46	DI7		
32	3-Φ SM1	47	DI8		

2) The event values of **Switch TOU Schedule** are illustrated in the table below:

Record Value	Description
1	Switch Schedule 1 to Schedule 2 manually
2	Switch Schedule 2 to Schedule 1 manually
3	Switch Schedule 1 to Schedule 2 automatically
4	Switch Schedule 2 to Schedule 1 automatically

3) The following table provides a detailed description of the SMs.

Channel	Description
1	All SMs
2	Reserved
3	1-Φ SM 1
…	…
26	1-Φ SM 24
27	Reserved
28	3-Φ SM 1
…	…
35	3-Φ SM 8

Appendix B - Data Recorder Parameters

1) General Status

Key	Description	Format	Key	Description	Format
1	DI Status	UINT32	15	Current H Alarm Status	UINT32
2	DO Status	UINT32	16	Current L Alarm Status	UINT32
3	Device Diagnostics	UINT32	17	P H Alarm Status	UINT32
4	Common Wiring Diagnostic Status	UINT32	18	P L Alarm Status	UINT32
5	3-Φ SM 1 Wiring Diagnostic Status	UINT32	19	Q H Alarm Status	UINT32
6	3-Φ SM 2 Wiring Diagnostic Status	UINT32	20	Q L Alarm Status	UINT32
7	3-Φ SM 3 Wiring Diagnostic Status	UINT32	21	S H Alarm Status	UINT32
8	3-Φ SM 4 Wiring Diagnostic Status	UINT32	22	S L Alarm Status	UINT32
9	3-Φ SM 5 Wiring Diagnostic Status	UINT32	23	I Unbalance Alarm Status	UINT32
10	3-Φ SM 6 Wiring Diagnostic Status	UINT32	24	I Phase Reversal Alarm Status	UINT32
11	3-Φ SM 7 Wiring Diagnostic Status	UINT32	25	DI Alarm Status	UINT32
12	3-Φ SM 8 Wiring Diagnostic Status	UINT32	26	Common Data Alarm Status	UINT32
13	Global Alarm Status	UINT32	27	Ethernet Status	UINT32
14	Voltage Alarm Status	UINT32			

2) Common Measurements

Key	Description	Format	Key	Description	Format
50	U1	FP32	63	IR1	FP32
51	U2	FP32	64	TC1	FP32
52	U3	FP32	65	TC2	FP32
53	ULN Average	FP32	66	TC3	FP32
54	U12	FP32	67	TC4	FP32
55	U23	FP32	68	NTC1 Resistance	FP32
56	U31	FP32	69	NTC2 Resistance	FP32
57	ULL Average	FP32	70	NTC3 Resistance	FP32
58	Frequency	FP32	71	NTC4 Resistance	FP32
59	U1/U12 Angle	FP32	72	IR2	FP32
60	U2/U23 Angle	FP32	73	IR3	FP32
61	U3/U31 Angle	FP32	74	IR4	FP32
62	Voltage Unbalance	FP32			

3) 3-Φ SMs Real-Time Measurements

Key	Description
100	3-Φ SM1
125	3-Φ SM2
150	3-Φ SM3
175	3-Φ SM4
200	3-Φ SM5
225	3-Φ SM6
250	3-Φ SM7
275	3-Φ SM8

Offset	Description	Format	Offset	Description	Format
+0	I1	FP32	+13	Sb	FP32
+1	I2	FP32	+14	Sc	FP32
+2	I3	FP32	+15	S total	FP32
+3	I avg	FP32	+16	PFa	FP32
+4	Pa	FP32	+17	PFb	FP32
+5	Pb	FP32	+18	PFc	FP32
+6	Pc	FP32	+19	PF total	FP32
+7	P total	FP32	+20	I1 Angle	FP32
+8	Qa	FP32	+21	I2 Angle	FP32
+9	Qb	FP32	+22	I3 Angle	FP32
+10	Qc	FP32	+23	Current Unbalance	FP32
+11	Q total	FP32	+24	Inc	FP32
+12	Sa	FP32			

4) 3-Φ SMs Demand Measurements

Key	Description
300	3-Φ SM1
315	3-Φ SM2
330	3-Φ SM3
345	3-Φ SM4
360	3-Φ SM5
375	3-Φ SM6
390	3-Φ SM7
405	3-Φ SM8

Offset	Description	Format	Offset	Description	Format
+0	P Total	FP32	+8	Pb	FP32
+1	Q Total	FP32	+9	Qb	FP32
+2	S Total	FP32	+10	Sb	FP32
+3	Ia	FP32	+11	Ic	FP32
+4	Pa	FP32	+12	Pc	FP32
+5	Qa	FP32	+13	Qc	FP32
+6	Sa	FP32	+14	Sc	FP32
+7	Ib	FP32			

5) 3-Φ SMs Energy Measurements

Key	Description
500	3-Φ SM1
544	3-Φ SM2
588	3-Φ SM3
632	3-Φ SM4
676	3-Φ SM5
720	3-Φ SM6
764	3-Φ SM7
808	3-Φ SM8

Offset	Description	Format	Offset	Description	Format
0	kWh Import	INT32	22	kvarh Import of T1	INT32
1	kWh Export	INT32	23	kvarh Export of T1	INT32
2	kWh Net	INT32	24	kWh Import of T2	INT32
3	kWh Total	INT32	25	kWh Export of T2	INT32
4	kvarh Import	INT32	26	kvarh Import of T2	INT32
5	kvarh Export	INT32	27	kvarh Export of T2	INT32
6	kvarh Net	INT32	28	kWh Import of T3	INT32
7	kvarh Total	INT32	29	kWh Export of T3	INT32
8	Phase A kWh Import	INT32	30	kvarh Import of T3	INT32
9	Phase A kWh Export	INT32	31	kvarh Export of T3	INT32
10	Phase A kvarh Import	INT32	32	kWh Import of T4	INT32
11	Phase A kvarh Export	INT32	33	kWh Export of T4	INT32
12	Phase B kWh Import	INT32	34	kvarh Import of T4	INT32
13	Phase B kWh Export	INT32	35	kvarh Export of T4	INT32
14	Phase B kvarh Import	INT32	36	kWh Import of T5	INT32
15	Phase B kvarh Export	INT32	37	kWh Export of T5	INT32
16	Phase C kWh Import	INT32	38	kvarh Import of T5	INT32
17	Phase C kWh Export	INT32	39	kvarh Export of T5	INT32
18	Phase C kvarh Import	INT32	40	kWh Import of T6	INT32
19	Phase C kvarh Export	INT32	41	kWh Export of T6	INT32
20	kWh Import of T1	INT32	42	kvarh Import of T6	INT32
21	kWh Export of T1	INT32	43	kvarh Export of T6	INT32

6) 3-Φ SMs PQ Measurements

Key	Description
900	3-Φ SM1
921	3-Φ SM2
942	3-Φ SM3
963	3-Φ SM4
984	3-Φ SM5
1005	3-Φ SM6
1026	3-Φ SM7
1047	3-Φ SM8

Offset	Description	Format	Offset	Description	Format
+0	P Fund.	INT32	+11	Pc Harmonic	INT32
+1	PF Fund.	INT32	+12	Ia TDD	INT32
+2	P Harmonic	INT32	+13	Ib TDD	INT32
+3	Pa Fund.	INT32	+14	Ic TDD	INT32
+4	Pb Fund.	INT32	+15	Ia K-Factor	INT32
+5	Pc Fund.	INT32	+16	Ib K-Factor	INT32
+6	PFa Fund.	INT32	+17	Ic K-Factor	INT32
+7	PFb Fund.	INT32	+18	Ia Crest-Factor	INT32
+8	PFc Fund.	INT32	+19	Ib Crest-Factor	INT32
+9	Pa Harmonic	INT32	+20	Ic Crest-Factor	INT32
+10	Pb Harmonic	INT32			INT32

7) Harmonic Measurements

Voltage Harmonic

Start Key No.	Description	Format
1100	UA THD	FP32
1101	UA TOHD	FP32
1102	UA TEHD	FP32
1103~1132	UA HD2 ~ UA HD31	FP32
1133	UB THD	FP32
1134	UB TOHD	FP32
1135	UB TEHD	FP32
1136~1165	UB HD2 ~ UB HD31	FP32
1166	UC THD	FP32
1167	UC TOHD	FP32
1168	UC TEHD	FP32
1169~1198	UC HD2 ~ UC HD31	FP32

1-Φ SMs Harmonic Measurements Structure

Offset	Description
+0	I THD
+1	I TOHD
+2	I TEHD
+3	I HD2
+4	I HD3
+5	I HD4
…	…
+7	I HD31

Start Key No.	Description
1200	3-Φ SM1 Phase A Harmonic
1233	3-Φ SM1 Phase B Harmonic
1266	3-Φ SM1 Phase C Harmonic
1299	3-Φ SM2 Phase A Harmonic
1332	3-Φ SM2 Phase B Harmonic
1365	3-Φ SM2 Phase C Harmonic
1398	3-Φ SM3 Phase A Harmonic
1431	3-Φ SM3 Phase B Harmonic
1464	3-Φ SM3 Phase C Harmonic

1497	3-Φ SM4 Phase A Harmonic
1530	3-Φ SM4 Phase B Harmonic
1563	3-Φ SM4 Phase C Harmonic
1596	3-Φ SM5 Phase A Harmonic
1629	3-Φ SM5 Phase B Harmonic
1662	3-Φ SM5 Phase C Harmonic
1695	3-Φ SM6 Phase A Harmonic
1728	3-Φ SM6 Phase B Harmonic
1761	3-Φ SM6 Phase C Harmonic
1794	3-Φ SM7 Phase A Harmonic
1827	3-Φ SM7 Phase B Harmonic
1860	3-Φ SM7 Phase C Harmonic
1893	3-Φ SM8 Phase A Harmonic
1926	3-Φ SM8 Phase B Harmonic
1959	3-Φ SM8 Phase C Harmonic

Appendix C - Technical Specifications

C.1 Main Unit

Power Supply (L/+, N/-)	
Standard Burden	95-250VAC/DC, ±10%, 47-440Hz <4W
Voltage Inputs (UA, UB, UC, UN)	
Voltage Input (Un) Range Starting Voltage Overload Burden	240VLN/415VLL 10V to 1.2Un 10V 1.2xUn continuous, 2xUn for 1s <0.02VA per phase
Frequency	45Hz to 65Hz
Current Inputs (CH1~CH4 or CH1~CH8)	
I Nominal (In) Split-Core CT Solid-Core CT Range Starting Current Overload Burden	40mA 50A/100A/200A/400A/800A/1600A to 40mA 100A to 40mA 5% to 120% 0.08% of In 1xIn continuous, 10xIn for 10s, 20xIn for 1s <0.15VA per phase
Optional Digital Inputs (COM, IN1 ~ IN12)	
Type Hysteresis	Active Contact, 220V AC/DC external excitation 1ms
Digital Outputs (DO11, DO12 or DO11, DO12 ~ DO41, DO42)	
Type Loading	Form A Mechanical Relay 5A @250VAC / 30VDC
Optional Residual Current Inputs (IR11, IR12 or IR11, IR12 ~ IR41, IR42)	
In Range CT Type	0.5mA 20mA to 2000mA Solid-Core CT
Optional Temperature Inputs (TC11, TC12 or TC11, TC12 ~ TC41, TC42)	
Type Range Cable Length	NTC Thermistors (Sensor Not Included) 0°C to 140°C 2m/3m optional
Communications	
RS-485 Protocol Baud Rate Ethernet	2xRS-485 Modbus RTU 1,200 to 38,400 bps Modbus TCP, MQTT, SNTP
Environmental Conditions	
Operating Temp. Storage Temp. Humidity Atmospheric Pressure Pollution Degree	-25°C to +70°C -40°C to +85°C 5% to 95% non-condensing 70 kPa to 106 kPa 2
Mechanical Characteristics	
Mounting Unit Dimensions IP Rating	DIN Rail 95x71.5x108mm IP40

Parameters	Accuracy	Resolution
Voltage	±0.5%	0.01V
Current	±0.5%	0.001A
Ir	±1%	0.1mA
P, Q, S	±1.0%	0.001kX
kWh	IEC62053-21 Class 1	0.01kXh
kvarh Fund.	IEC 62053-24 Class 1	0.01kvarh
PF	±1.0%	0.001
Frequency	±0.02 Hz	0.001Hz
Harmonics	IEC 61000-4-7 Class II	0.001%
Temperature	±1.0°C	0.01°C

C.2 External CTs

Models:

- PMC-SCCT-50A-40mA-16-A
- PMC-SCCT-100A-40mA-16-A
- PMC-SCCT-200A-40mA-24-A
- PMC-SCCT-400A-40mA-35-A

Environment	
Operating Temperature	-40°C to +50°C
Humidity	≤85%
Storage Temperature	-40°C to +85°C
Atmospheric Pressure	70-110kpa
Mechanical Structure	
Dotted Terminals	P1 and white leads
Enclosure	Flame Rating 94-V0
RoHS	Compliance
Secondary Output	Black & White Stranded Wire
Technical Specification	
Frequency	50-400Hz
Insulation Resistance	100MΩ/500VDC, 1min
Withstand Voltage (Core to Coil)	4000V/10s, 1mA
Open-Circuit Protection	6-8V

Models:

- PMC-SCCT-800A-40mA-A
- PMC-SCCT-1600A-40mA-A

Environment	
Operating Temperature	-20°C to +50°C
Humidity	≤85%
Storage Temperature	-40°C to +85°C
Atmospheric Pressure	70-110kpa
Mechanical Structure	
Dotted Terminals	P1 and S1
Enclosure	Flame Rating 94-V0
RoHS	Compliance
Primary Input	P1, P2
Secondary Output	S1, S2
Installation	Mounting Bolt
Technical Specification	
Frequency	50-400Hz
Insulation Resistance	100MΩ/500VDC, 1min
Withstand Voltage (Core to Coil)	4000V/10s, 1mA
Rated Steady Current	2.5Ith
Rated Short-time Thermal Current	20In
Open-Circuit Protection	6-8V

Model: PMC-CT-100A-40mA-12-A

Environment	
Operating Temperature	-40°C to +50°C
Humidity	≤85%
Storage Temperature	-40°C to +85°C
Atmospheric Pressure	70-110kpa
Mechanical Structure	
Dotted Terminals	P1 and S1
Enclosure	Flame Rating 94-V0
RoHS	Compliance
Primary Input	P1, P2
Secondary Output	S1, S2
Installation	Mounting Bolt
Technical Specification	
Frequency	50-400Hz
Insulation Resistance	1000MΩ/500VDC, 1min
Withstand Voltage (Core to Coil)	4000V/min, 1mA
Open-Circuit Protection	6-8V

Appendix D - Standards Compliance

Safety Requirements	
CE LVD 2014/35/EU	EN 61010-1: 2010+A1: 2019 EN IEC 61010-2-030: 2021+A11: 2021
Electrical Safety in Low Voltage Distribution Systems up to 1000Vac and 1500 Vdc	IEC 61557-12: 2021 (PMD)
Insulation AC Voltage: 2kV @ 1 minute Insulation Resistance: >100MΩ Impulse Voltage: 6kV, 1.2/50µs	EN 61010-1: 2010+A1: 2019 IEC 62052-31: 2015
Electromagnetic Compatibility CE EMC Directive 2014/30/EU (EN IEC 61326: 2021)	
Immunity Tests	
Electrostatic Discharge	EN 61000-4-2: 2009
Radiated Fields	EN IEC 61000-4-3: 2020
Fast Transients	EN 61000-4-4: 2012
Surges	EN 61000-4-5: 2014+A1: 2017
Conducted Disturbances	EN 61000-4-6: 2014+AC: 2015
Magnetic Fields	EN 61000-4-8: 2010
Voltage Dips and Interruptions	EN IEC 61000-4-11: 2020
Ring Wave	EN 61000-4-12: 2017
Immunity Standard for Industrial Environments	EN IEC 61000-6-2: 2019
Emission Tests	
Limits and Methods of Measurement of Electromagnetic Disturbance Characteristics of Industrial, Scientific and Medical (ISM) Radio-Frequency Equipment	EN 55011: 2016 + A1: 2017 + A11: 2020 + A2: 2021
Electromagnetic Compatibility of Multimedia Equipment - Emission Requirements	EN 55032: 2015+A11: 2020+A1: 2020
Limits for Harmonic Current Emissions for Equipment with Rated Current ≤16 A	EN IEC 61000-3-2: 2019+A1: 2021
Limitation of Voltage Fluctuations and Flicker in Low-Voltage Supply Systems for Equipment with Rated Current ≤16 A	EN 61000-3-3: 2013+A1: 2019+A2: 2021
Emission Standard for Industrial Environments	EN IEC 61000-6-4: 2019
Mechanical Tests	
Spring Hammer Test	IEC 62052-31: 2015
Vibration Test	IEC 62052-11: 2020
Shock Test	IEC 62052-11: 2020

Appendix E - Ordering Guide

Version 20260911

Product Code	Description
PMC-512 Multi-Circuit Power Monitor	
Basic Function	
M	Multi-Circuit Power Monitor with Backlit B&W LCD Display, 16MB On-board Memory, supporting Real-time RMS measurements, Data Recorder, Daily and Monthly Freeze Logs, Demands, Multi-Tariff TOU, standard with 2xRS-485 ports
Branch Feeders	
4	4x3-Phase SM (12x1-Φ or 4x3-Φ Sub-Meters)
8*&	8x3-Phase SM (24x1-Φ or 8x3-Φ Sub-Meters)
Input Current	
SCCT	External Split-Core CT with 50A, 100A, 200A, 400A, 800A, 1600A Primary and 40mA Secondary
CT	External Solid-Core CT with 100A Primary and 40mA Secondary
Input Voltage	
3	240VAC (3x240VLN/415VLL)
Power Supply	
2	95-250VAC/DC ± 10%, 47-440Hz
Frequency	
5	45-65Hz
I/O	
N	1xDO
A*	12xDI (220VAC/DC) + 1xIR + 4xNTC + 1xDO
B*	4xDO + 4xIR + 4xNTC
Expansion Comm.	
N#	None
ETH*^	1xEthernet Port
Display Language	
E	English

PMC-512	-	M	4	SCCT	3	2	5	N	N	E	PMC-512-M4SCCT325NNE (Standard Model)

* Additional charges apply

\# Expansion Comm. Option "N" is only available with I/O Option "N" and "A"

^ Expansion Comm. Option "ETH" is only available with Branch Feeders Option "4" + I/O Option "B"

& Branch Feeders Option "8" is only available with I/O Option "N" or "A" + Expansion Comm. Option "N".

1) Please refer to PMC-512-M Accessories for CTs and NTC Sensor options.

Accessories

CET

Version 20260429

PMC-512-M Accessories				
Split-Core CTs				
Model #	**Specification**	**Accuracy**	**Aperture (mm)**	**Cable Length**
PMC-SCCT-50A-40mA-16-A	50A/40mA, 1-phase Split-Core CT, 2-Pin Black Pluggable Connector	0.5	Ø16	2m
PMC-SCCT-100A-40mA-16-A	100A/40mA, 1-phase Split-Core CT, 2-Pin Black Pluggable Connector	0.5	Ø16	2m
PMC-SCCT-200A-40mA-24-A	200A/40mA, 1-phase Split-Core CT, 2-Pin Black Pluggable Connector	0.5	Ø24	2m
PMC-SCCT-400A-40mA-35-A	400A/40mA, 1-phase Split-Core CT, 2-Pin Black Pluggable Connector	0.5	Ø35	2m
PMC-SCCT-800A-40mA-A	800A/40mA, 1-phase Split-Core CT	0.5	80x50	See Note 2
PMC-SCCT-1600A-40mA-A	1600A/40mA, 1-phase Split-Core CT	0.5	130x55	See Note 2
Solid-Core CTs				
Model #	**Specification**	**Accuracy**	**Aperture (mm)**	**Cable Length**
PMC-CT-100A-40mA-12-A	100A/40mA, 1-phase Solid-Core CT	0.2	Ø12	2m
CT Adaptor (Standard)				
Model #	**Description**			**Cable Length**
PMC-BCC-RJ12-3CT, P	3 single-phase CTs with pluggable connectors can be connected through one Adaptor			0.6m

Notes:
1) Please refer to Cable Length for details and contact the factory in advance for special requirements.
2) The PMC-SCCT-800A-40mA-A and PMC-SCCT-1600A-40mA-A come with PMC-BCC-350-2, which is a 2m cable with 2-Pin Black Pluggable Connector.
3) One PMC-512-M with 4 Branch Feeders can be equipped with 12 pcs of CT. One PMC-512-M with 8 Branch Feeders can be equipped with 24 pcs of CT.
4) It is recommended to select the "PMC-BCC-RJ12-3CT, P" for use with CTs that have pluggable connectors

CT Adaptor (Optional)		
Model #	**Description**	**Cable Length**
PMC-BCC-RJ12-3CT, N	3 single-phase CTs with needle connectors can be connected through one Adaptor	0.6m

Notes:
1) The "PMC-BCC-RJ12-3CT, N" should only be selected when the CTs to be connected have needle connectors

Residual Current Solid-Core CTs					
Model #	**Load Current**	**Specification**	**Accuracy**	**Aperture (mm)**	**Cable Length**
CT517103	100A	1A/0.5mA Solid-Core CT	0.5	Ø30	3m
CT517203	160A	1A/0.5mA Solid-Core CT	0.5	Ø46	3m
CT517303	250A	1A/0.5mA Solid-Core CT	0.5	Ø65	3m
CT517403	400A	1A/0.5mA Solid-Core CT	0.5	Ø80	3m

Extension Cable for SCCT	
Model #	Specification
PMC-BCC-350-1.5	1.5m extension cable
PMC-BCC-350-3.0	3.0m extension cable
PMC-BCC-350-18	18m extension cable

NTC Thermistors	
Model #	Specification
NTC-1044, 2	4xNTC Sensor as one set, each with insulated metal protective sleeve (Yellow, Green, Red and Black), Needle Connector and 2m cable
NTC-1044, 3	4xNTC Sensor as one set, each with insulated metal protective sleeve (Yellow, Green, Red and Black), Needle Connector and 3m cable
NTC-1043, M10, 1	3x NTC Sensor as one set, each with heat shrink sleeve (Brown, Black and Grey respectively), Ø10mm Ring Connector, Needle Connector and 1m cable
NTC-1044, M10, 1	4x NTC Sensor as one set, each with heat shrink sleeve (Brown, Black, Grey and Blue respectively), Ø10mm Ring Connector, Needle Connector and 1m cable

Revision History Logs

Version	Date	Description of Changes
V1.0	20260526	Initial Version
V1.1	20260920	1. Updated Installation diagram. 2. Updated CT Adaptors Dimensions diagrams. 3. Added Solid-Core CT (PMC-CT-100A-40mA-12-A) related description. 4. Updated Ordering Guide. 5. Added Accessories Ordering Guide.

Contact us

CET Electric Technology Inc.
E: sales@cet-global.com
W: www.cet-global.com